Design and control of Static Converters

Joan Bergas
CITCEA-UPC

CO-AUTHORS: Sergi Fillet, Daniel Montesinos, Oriol Gomis, Antoni Sudrià

CITCEA • Centre d'Innovació Tecnològica en Convertidors Estàtics i Accionaments
UNIVERSITAT POLITÈCNICA DE CATALUNYA

Applications

Power Converter as interface

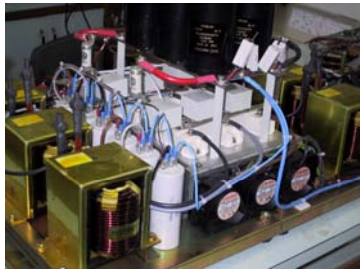

DSP /Microprocessor as a Core

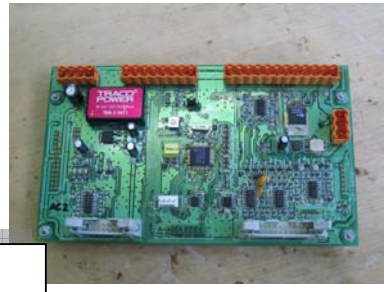

Grid Interface

Motor Control

Distributed Generation

Index

- Static Converters
- DSP core of application: From Hardware to software
- Inner current loop: power electronics building block.
- One topology, many applications:
  - DCM (Digital Motor Control).
  - Active Front-End.
    - Active compensator of Reactive energy
    - Active filter
    - Hybrid filters
  - Back-to-Back
    - UPS
    - Renewable power generators
    - Sag Generator.
- More over: CAN, CANOpen, IEC 1131.

Design and Control of Static Converters

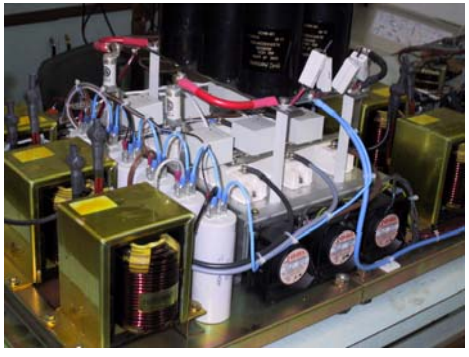

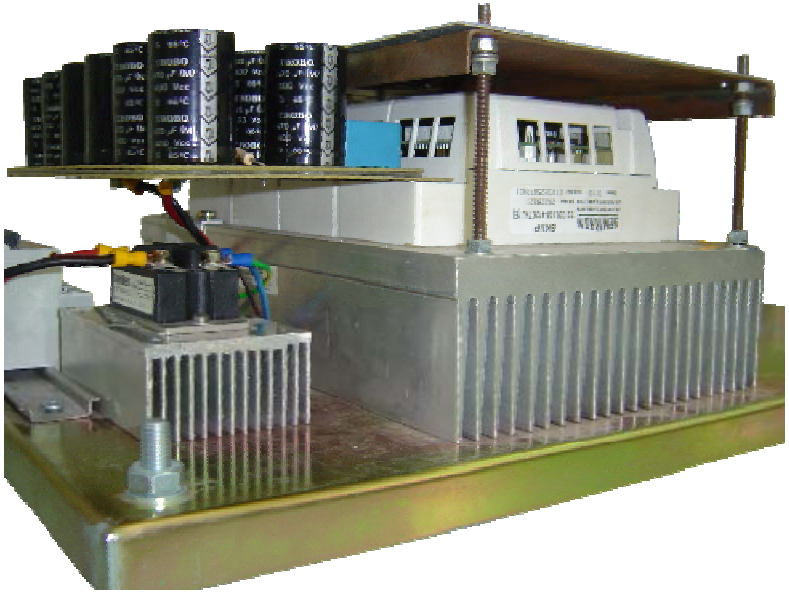

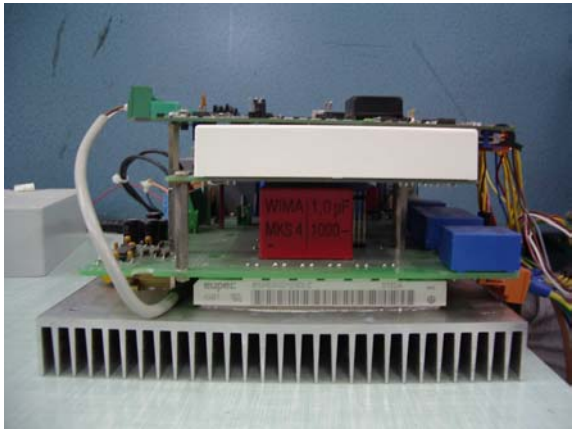

DSP core of application: From Hardware to software

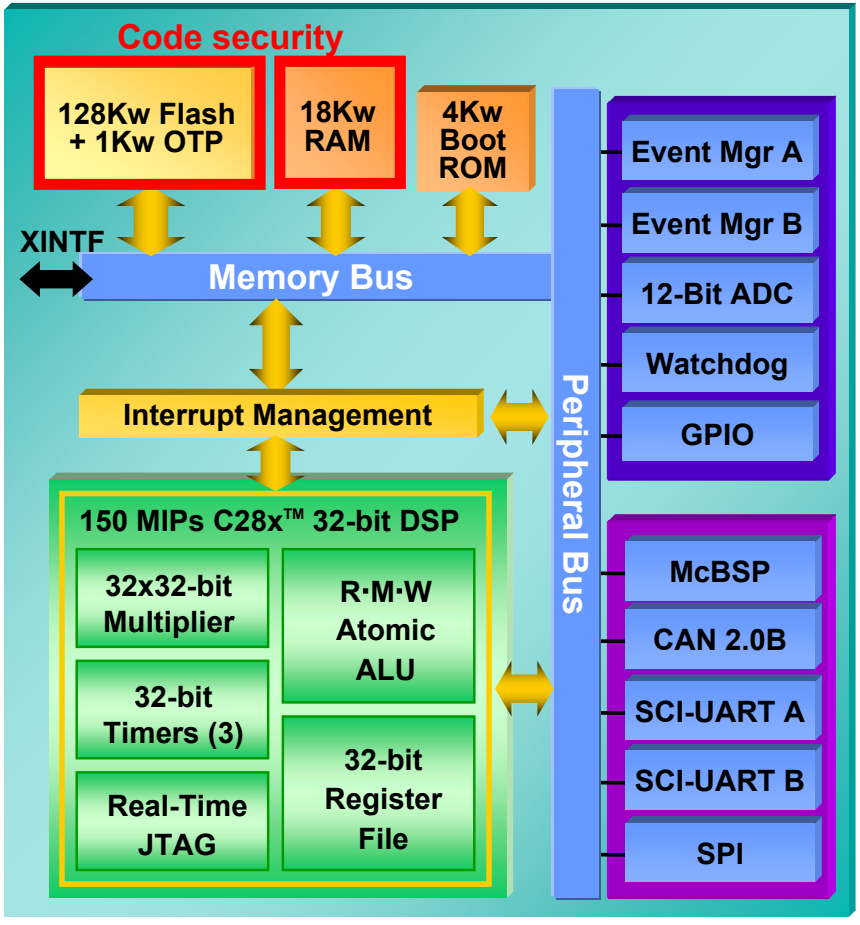

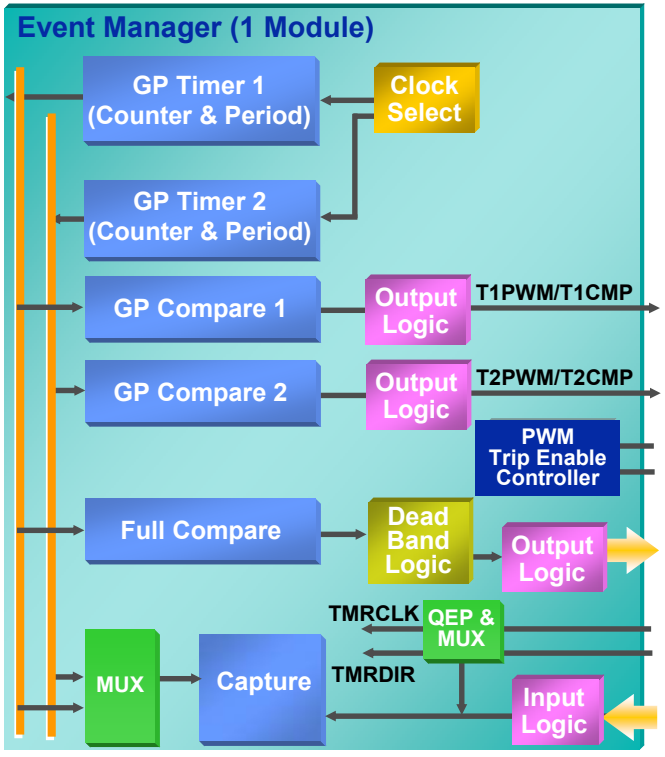

Inner Current loop: Power Electronics Building Block

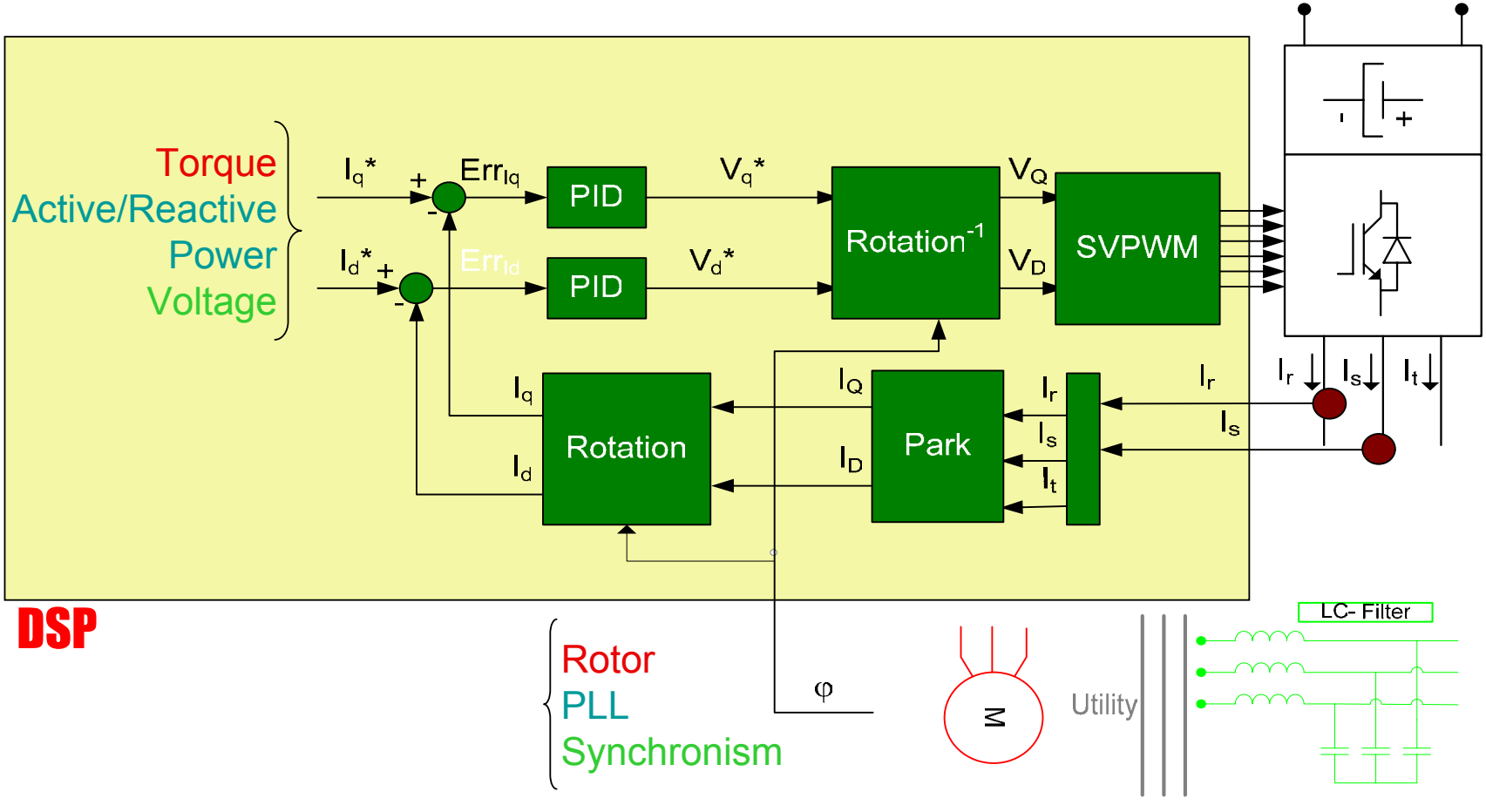

Inner Current loop: Power Electronics Building Block

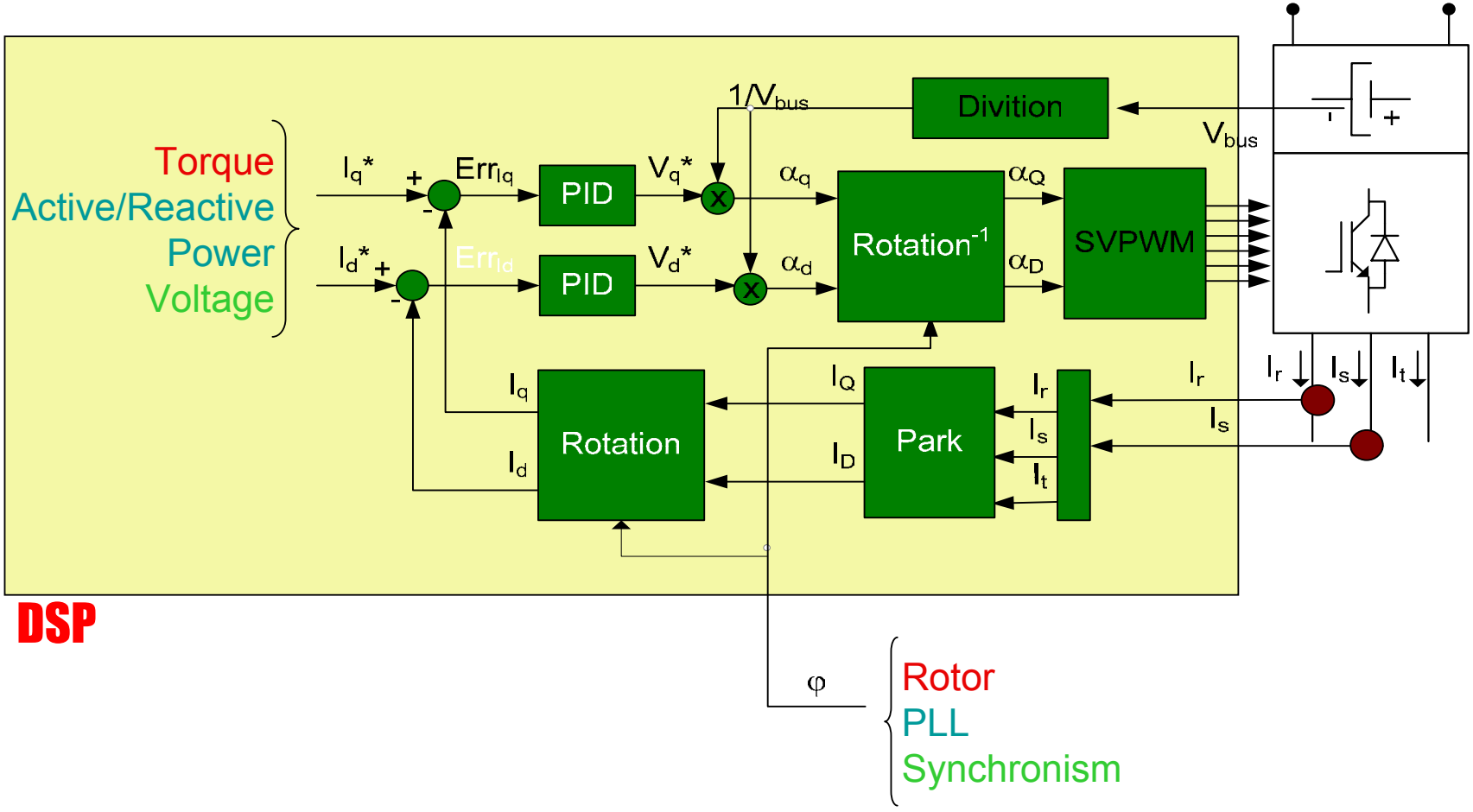

Digital Motor Control

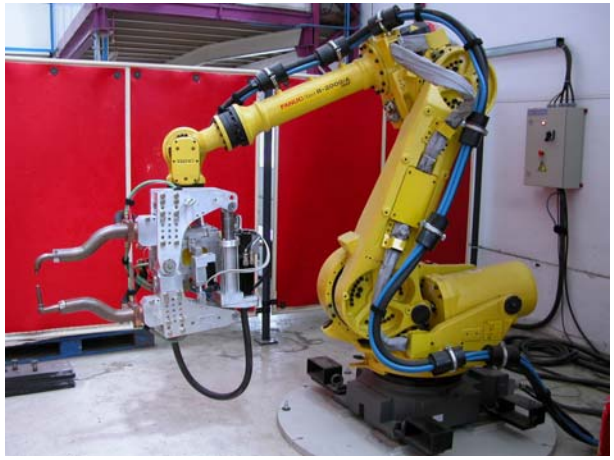

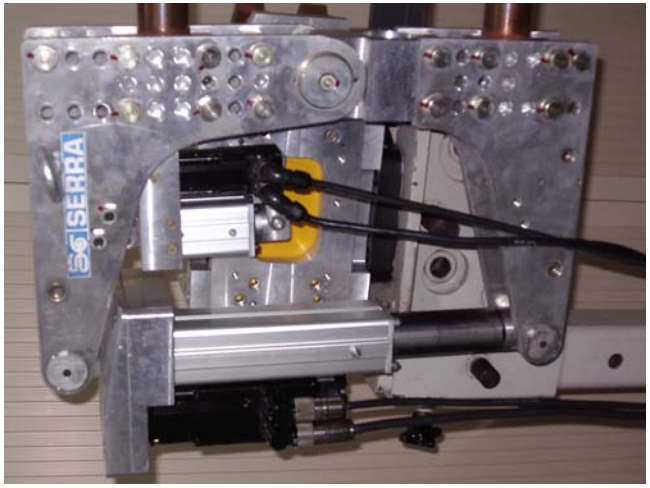

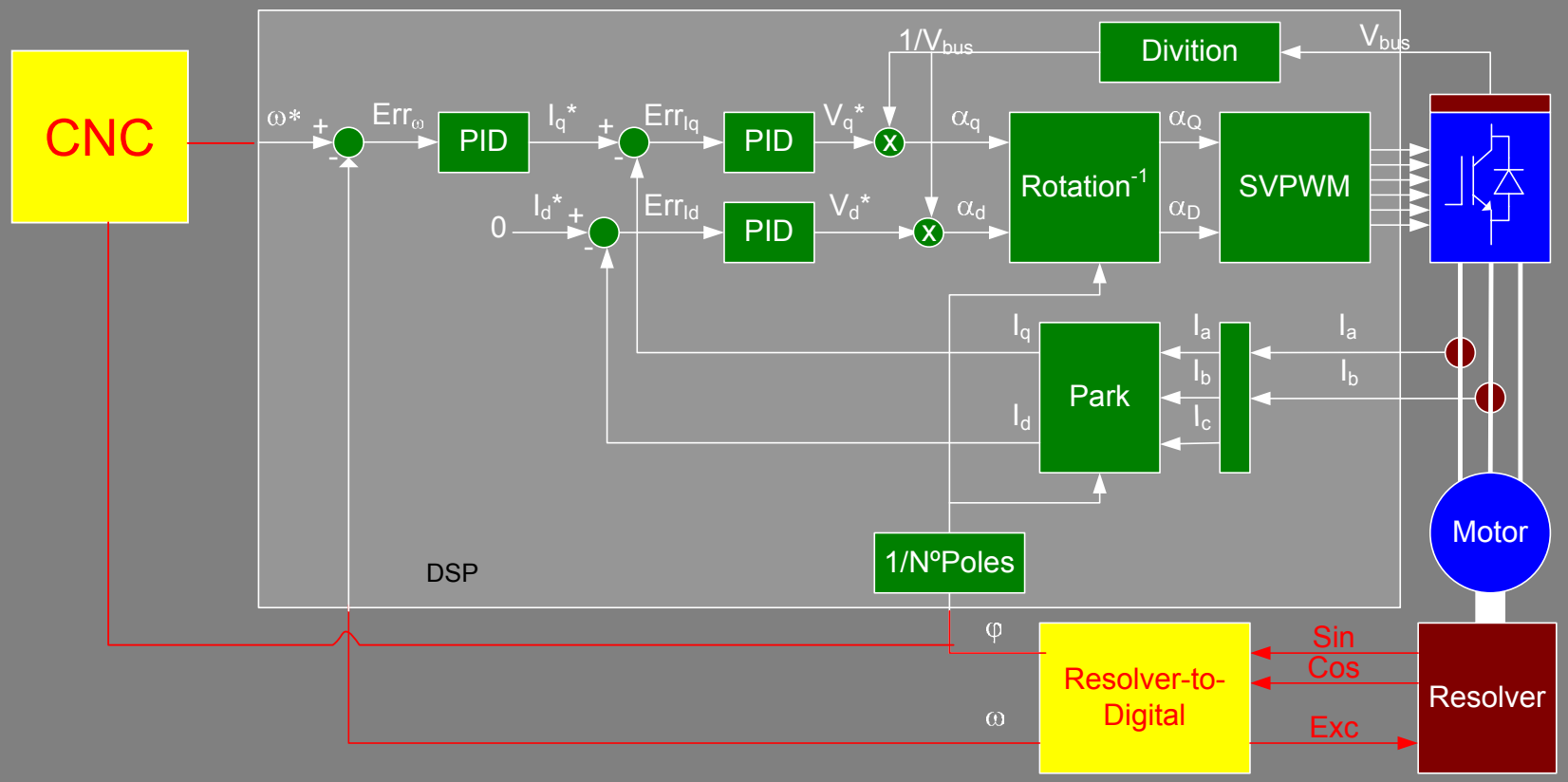
CNC
ω*
Errω
PID
Iq*
Errlq
PID
Vq*
1/Vbus
Divition
Vbus
αq
αQ
Rotation-1
SVPWM
0
Id*
Errld
PID
Vd*
αd
αD
Iq
Id
Park
Ia
Ib
Ic
Ia
Ib
Motor
DSP
1/NºPoles
φ
ω
Resolver-to-Digital
Sin
Cos
Exc
Resolver

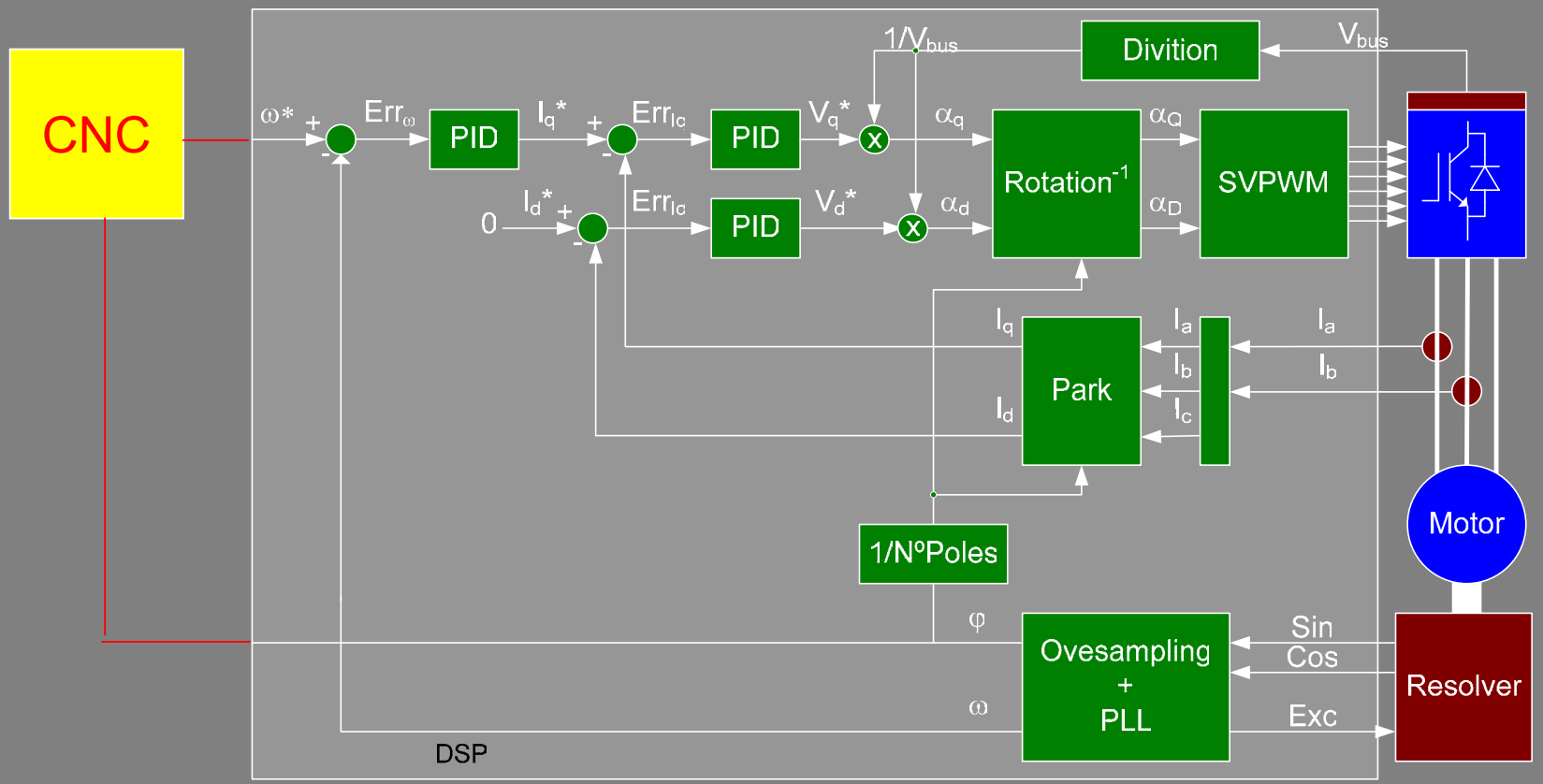
CNC
ω*
Errω
PID
Iq*
Errlc
PID
Vq*
1/Vbus
Divition
Vbus
αq
αQ
Rotation-1
SVPWM
0
Id*
Errlc
PID
Vd*
αd
αD
Iq
Id
Park
Ia
Ib
Ic
Ia
Ib
Motor
1/NºPoles
φ
ω
Ovesampling + PLL
Sin
Cos
Exc
Resolver
DSP

CITCEA · Centre d'Innovació Tecnològica en Convertidors Estàtics i Accionaments

I International Conference in Energy Innovation

Design and Control of Static Converters

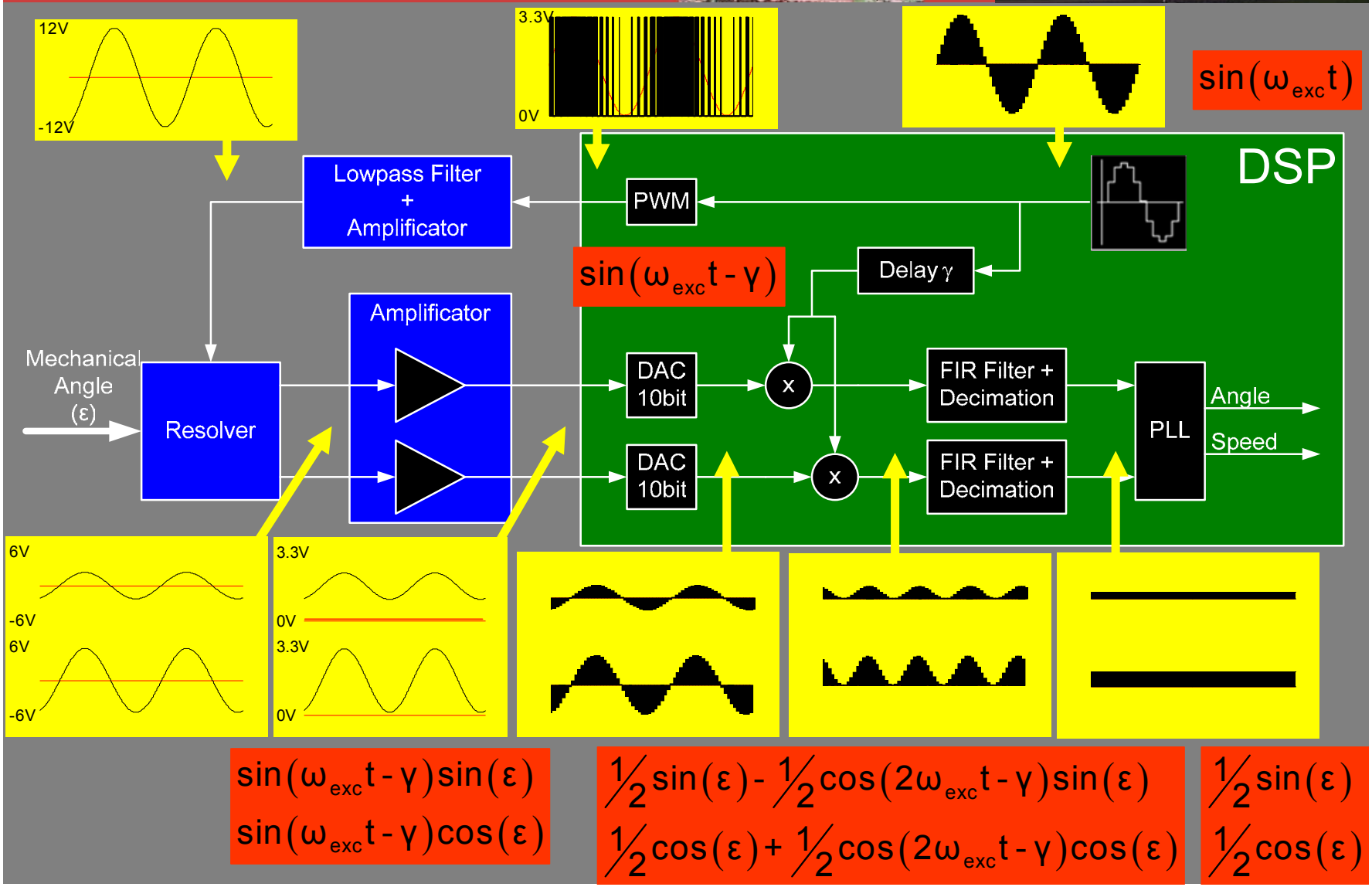

- Angle and speed determination
- Resolution increase
- Delay correction

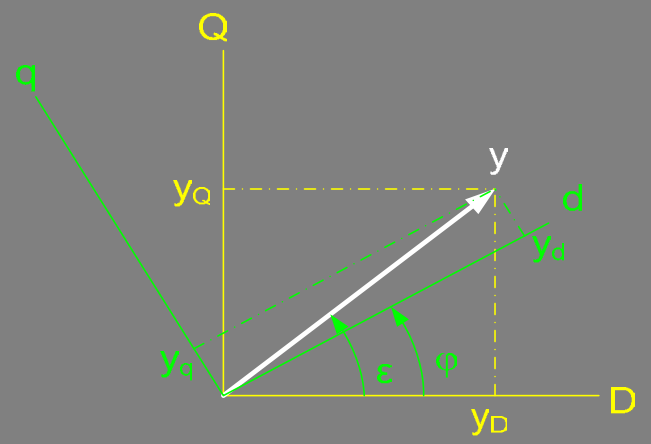

$$\sin(\varepsilon) = y_Q$$
$$\cos(\varepsilon) = y_D$$

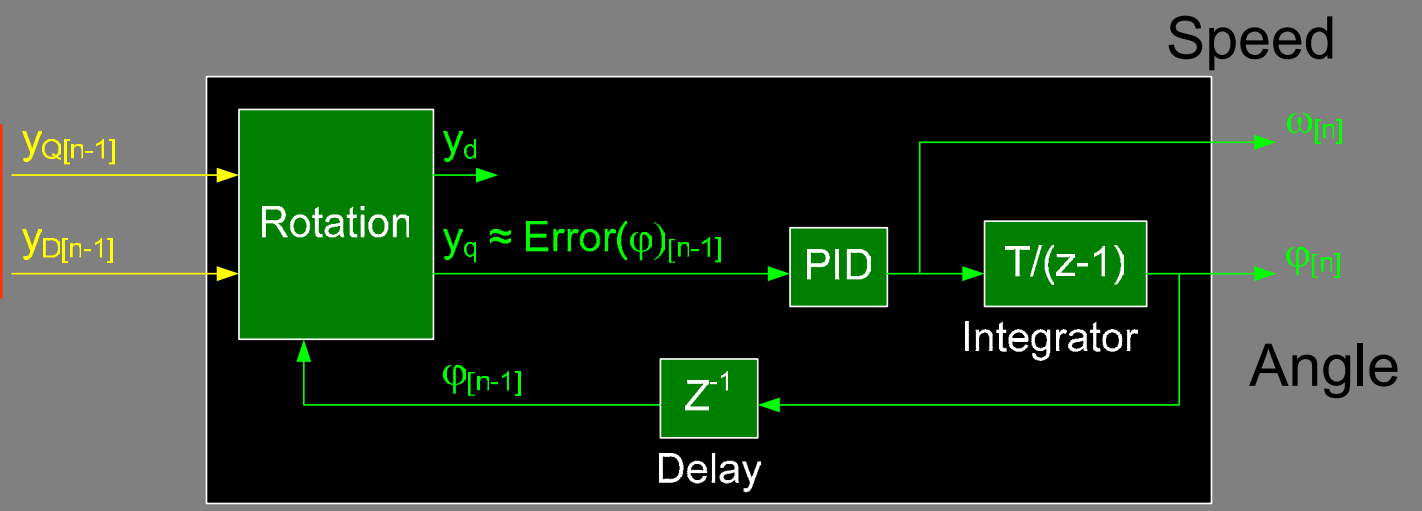

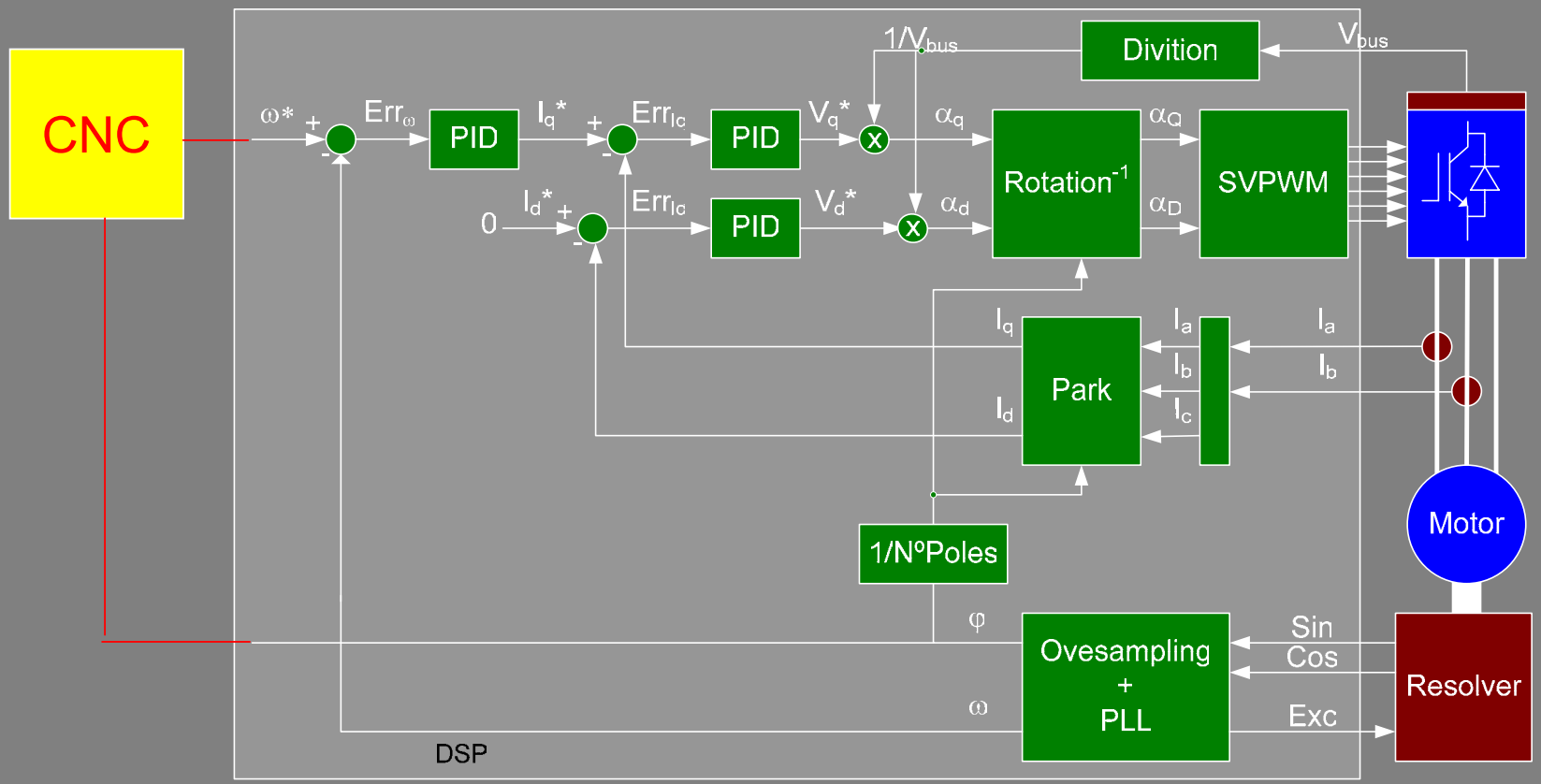
CNC
ω*
Errω
PID
Iq*
ErrIc
PID
Vq*
1/Vbus
Division
Vbus
αq
αQ
Rotation-1
SVPWM
0
Id*
ErrIc
PID
Vd*
αd
αD
Iq
Id
Park
Ia
Ib
Ic
Ia
Ib
Motor
1/NºPoles
φ
ω
Ovesampling + PLL
Sin
Cos
Exc
Resolver
DSP

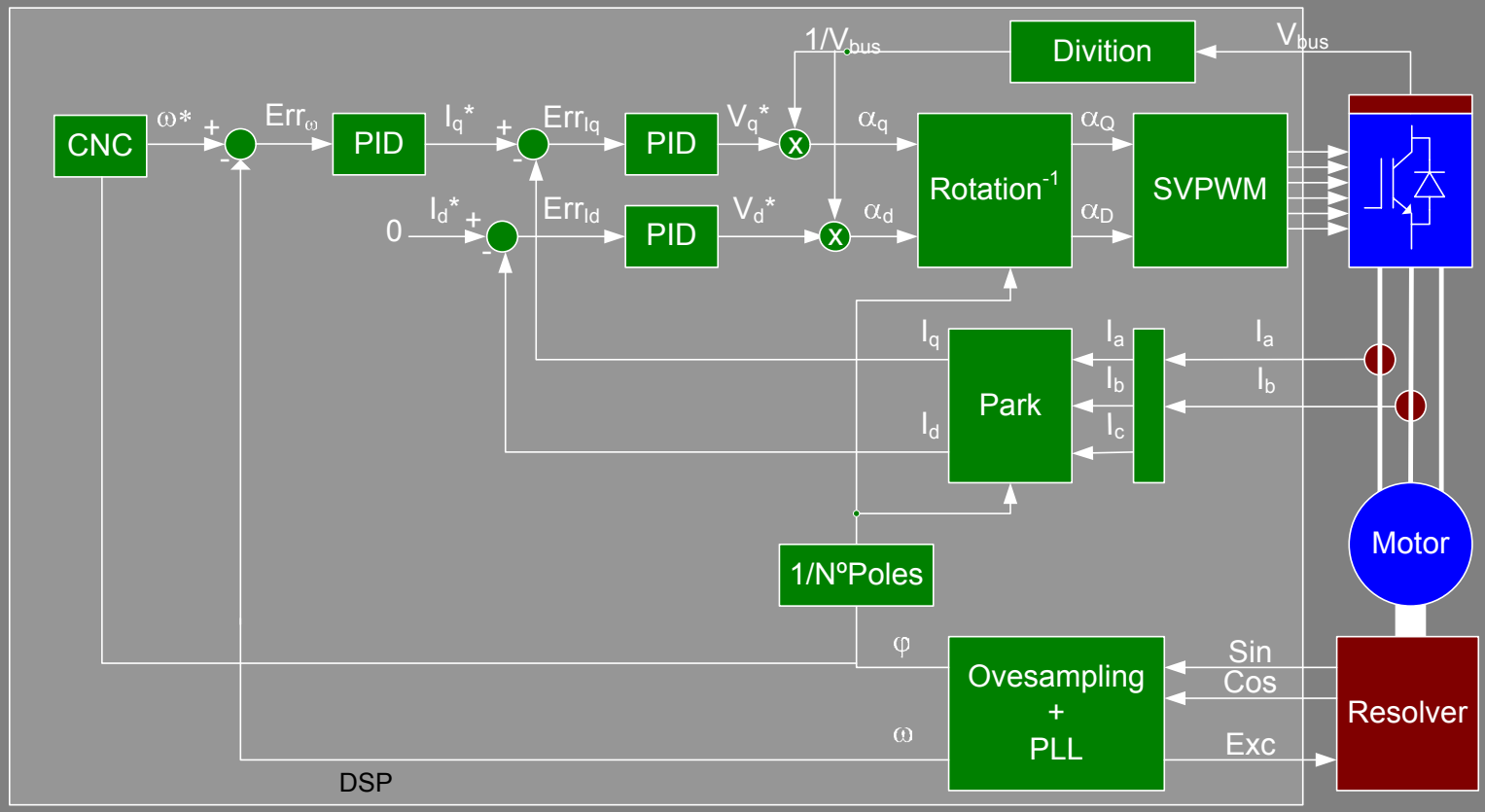
CNC
ω*
Errω
PID
Iq*
Errlq
PID
Vq*
1/Vbus
Divition
Vbus
αq
Rotation-1
αQ
SVPWM
0
Id*
Errld
PID
Vd*
αd
αD
Iq
Id
Park
Ia
Ib
Ic
Ia
Ib
Motor
1/NºPoles
φ
ω
Ovesampling + PLL
Sin
Cos
Exc
Resolver
DSP

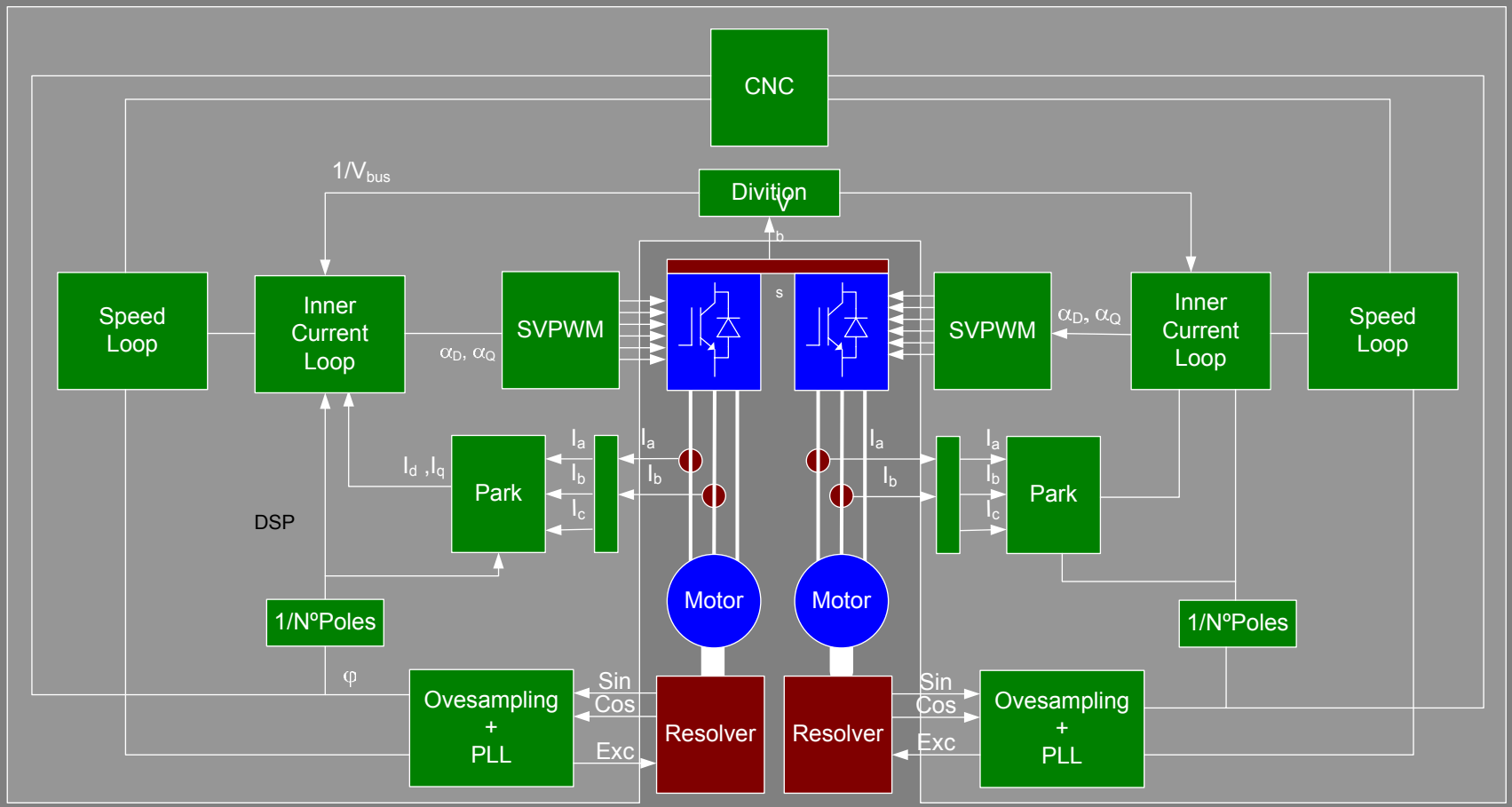
CNC
1/V_bus
Divition
Speed Loop
Inner Current Loop
SVPWM
α_D, α_Q
SVPWM
α_D, α_Q
Inner Current Loop
Speed Loop
I_d ,I_q
Park
I_a
I_b
I_c
I_a
I_b
I_a
I_b
I_a
I_b
I_c
Park
DSP
Motor
Motor
1/NºPoles
1/NºPoles
φ
Ovesampling + PLL
Sin
Cos
Exc
Resolver
Resolver
Sin
Cos
Exc
Ovesampling + PLL

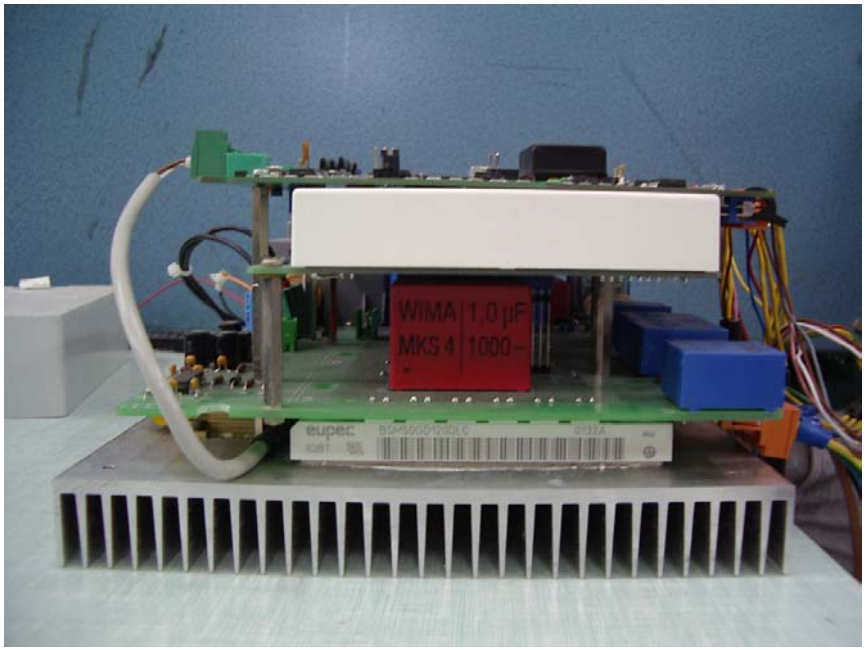
WIMA 1.0µF
MKS 4 1000–
eupec

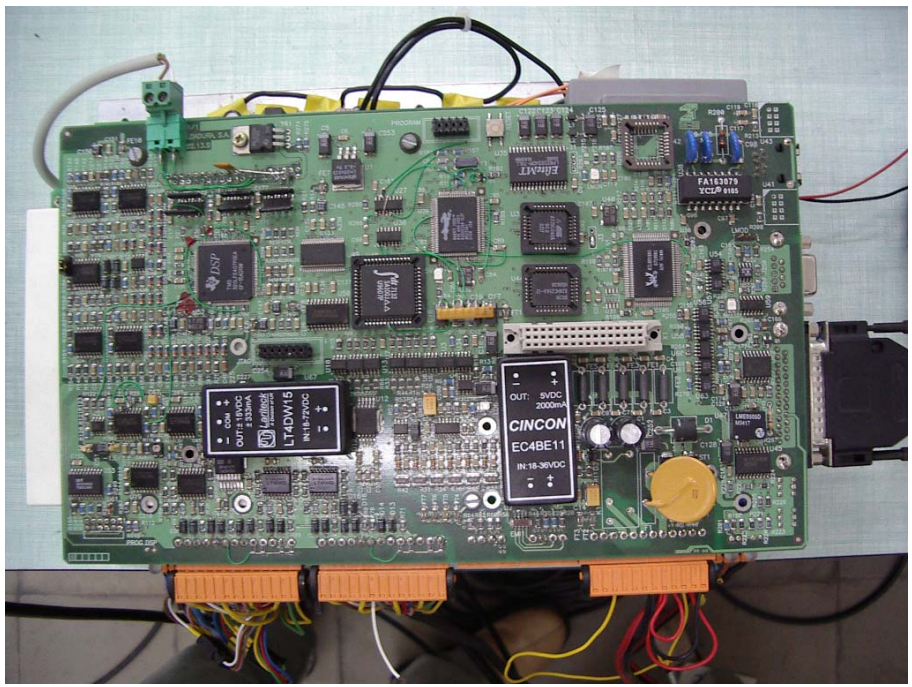
LT4DW15
CINCON
EC4BE11

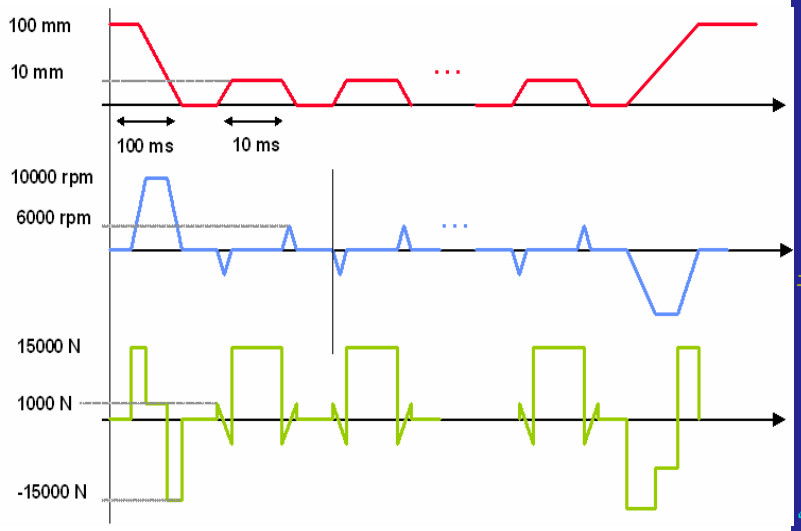
100 mm
10 mm
100 ms
10 ms
10000 rpm
6000 rpm
15000 N
1000 N
-15000 N

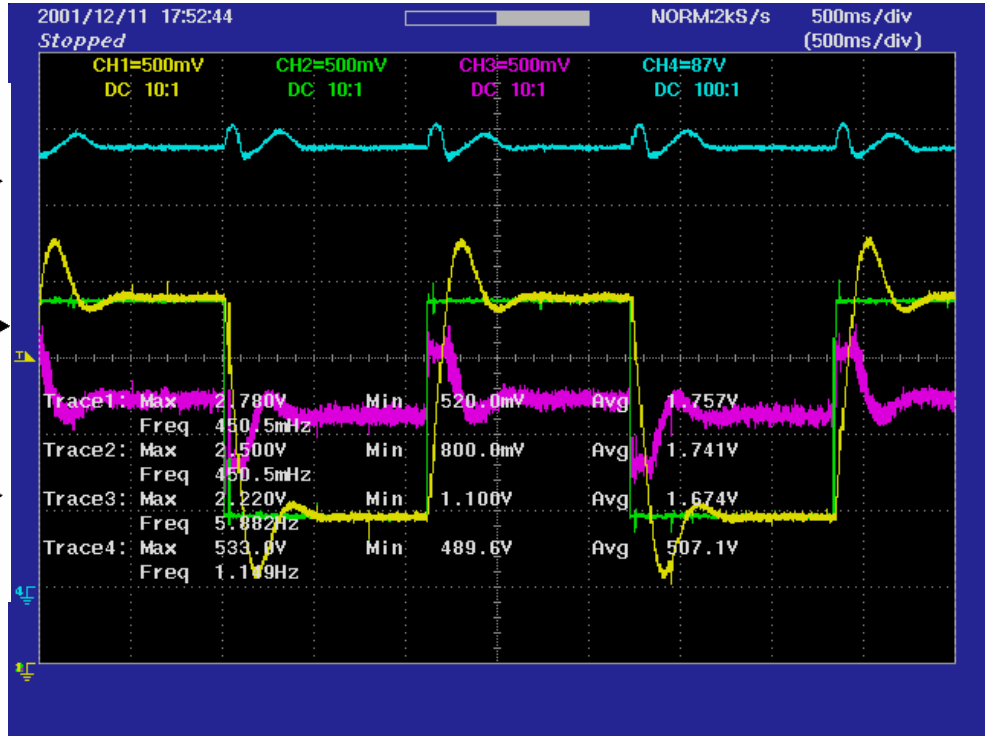
2001/12/11 17:52:44
Stopped
NORM:2kS/s
500ms/div
(500ms/div)
CH1=500mV DC 10:1
CH2=500mV DC 10:1
CH3=500mV DC 10:1
CH4=87V DC 100:1
Trace1: Max 2.780V Min 520.0mV Avg 1.757V
Freq 450.5mHz
Trace2: Max 2.500V Min 800.0mV Avg 1.741V
Freq 450.5mHz
Trace3: Max 2.220V Min 1.100V Avg 1.674V
Freq 5.882Hz
Trace4: Max 533.0V Min 489.6V Avg 507.1V
Freq 1.119Hz

Grid Interface

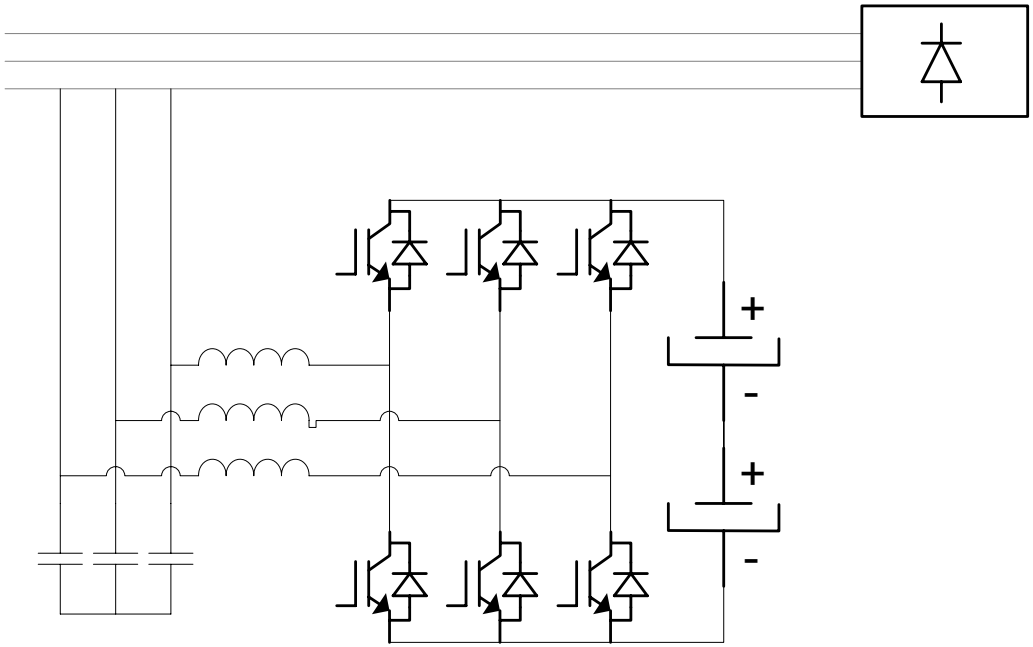

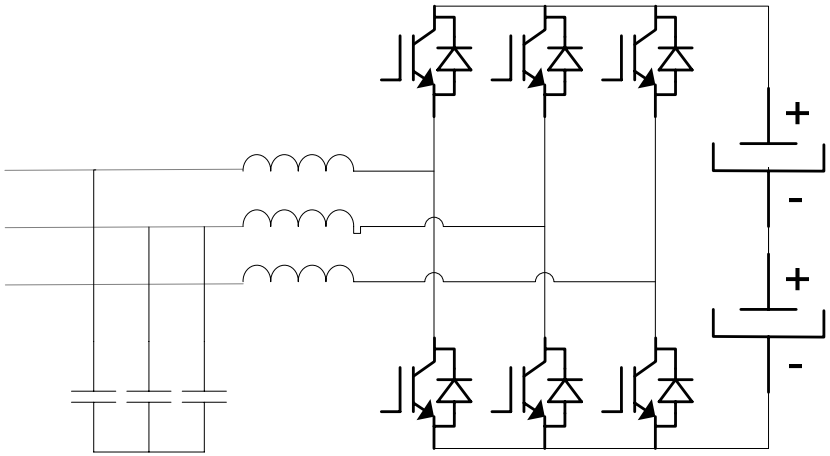

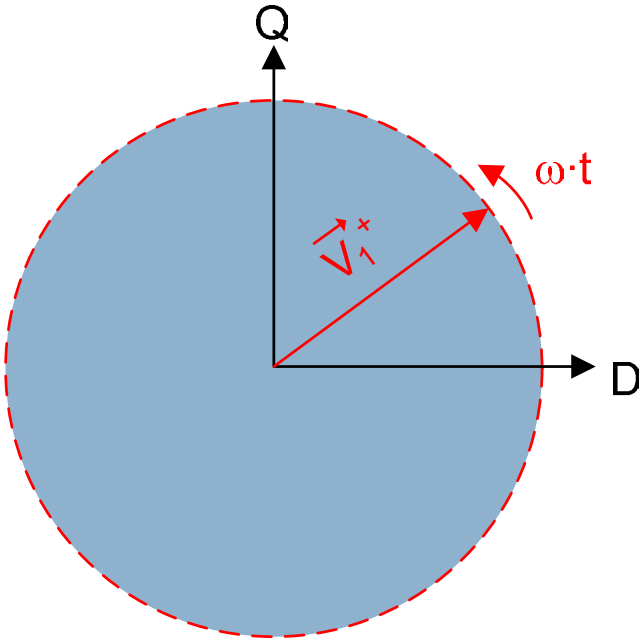

$$\begin{bmatrix} v_r \\ v_s \\ v_t \end{bmatrix} = \sum_{k=1}^{\infty} \left(V_k^+ \begin{bmatrix} \cos(w \cdot k \cdot t) \\ \cos\left(\left[w \cdot t - 2\pi/3\right] \cdot k\right) \\ \cos\left(\left[w \cdot t + 2\pi/3\right] \cdot k\right) \end{bmatrix} + V_k^- \begin{bmatrix} \cos(w_i \cdot t \cdot k + \varphi_k) \\ \cos\left(\left[w_i \cdot t + 2\pi/3\right] \cdot k + \varphi_k\right) \\ \cos\left(\left[w_i \cdot t - 2\pi/3\right] \cdot k + \varphi_k\right) \end{bmatrix} \right)$$

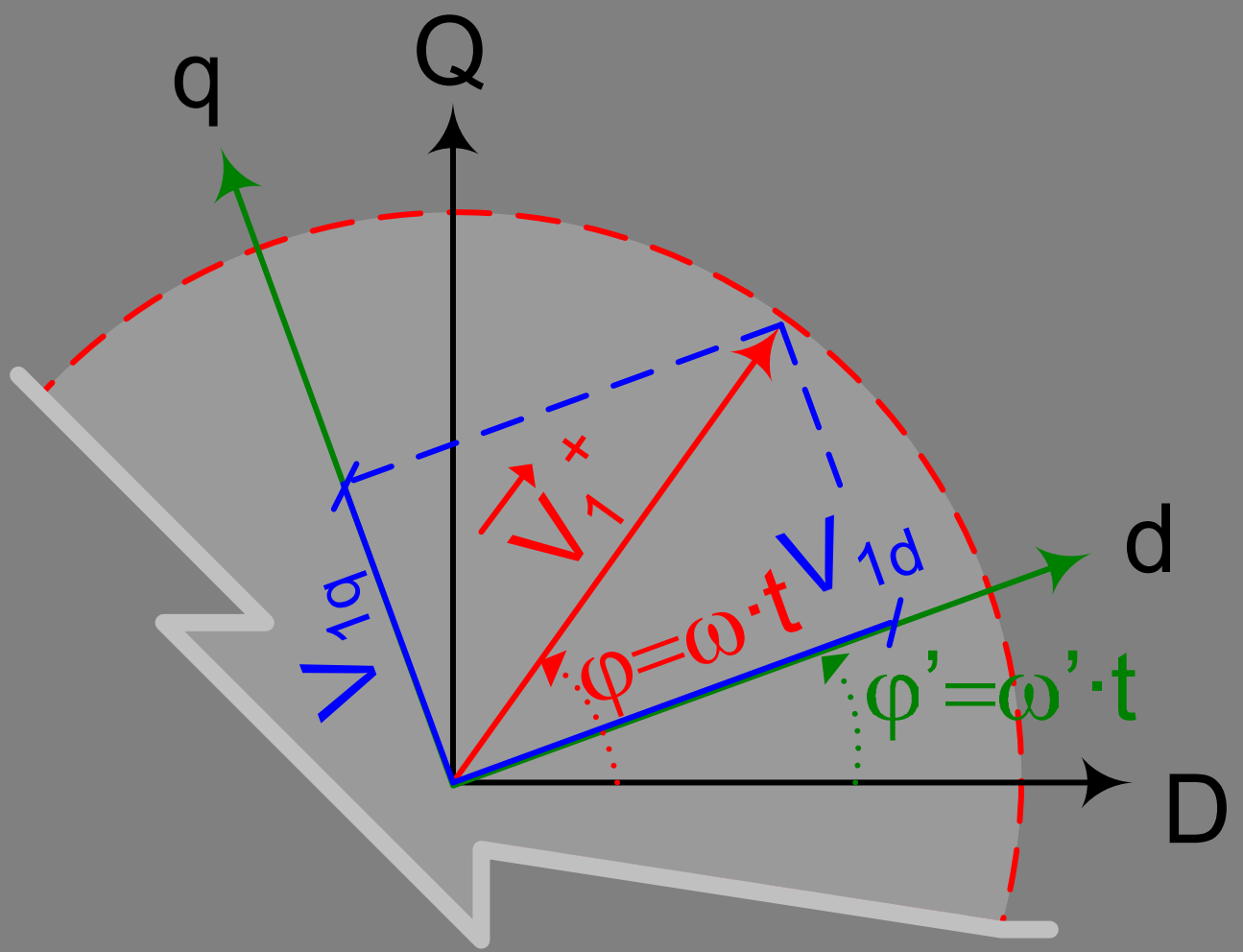
q
Q
d
D
V_1^+
V_{1q}
V_{1d}
$\varphi=\omega\cdot t$
$\varphi'=\omega'\cdot t$

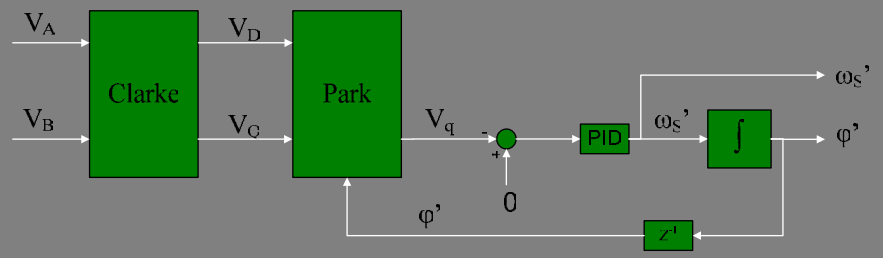
V_A
V_B
Clarke
V_D
V_Q
Park
V_q
PID
ω_S'
$\int$
φ'
0
z^{-1}

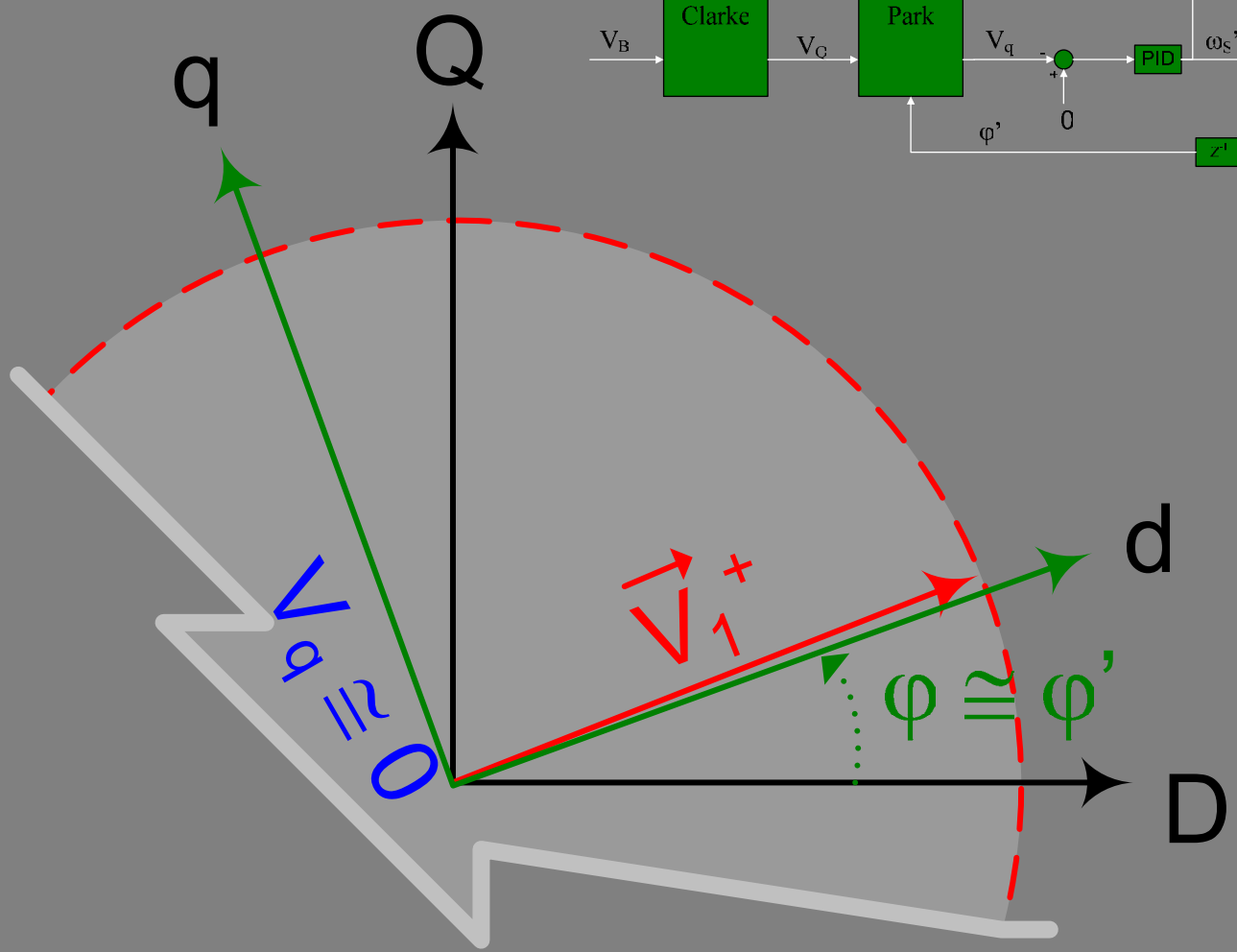
q
Q
d
D
$V_q \cong 0$
$\vec{V}_1^+$
$\varphi \cong \varphi'$

$$I_r = \sqrt{2} I_{eff} \cos(\omega \cdot t - \theta)$$
$$I_s = \sqrt{2} I_{eff} \cos\left(\omega \cdot t - 2\pi/3 - \theta\right)$$
$$I_t = \sqrt{2} I_{eff} \cos\left(\omega \cdot t + 2\pi/3 - \theta\right)$$

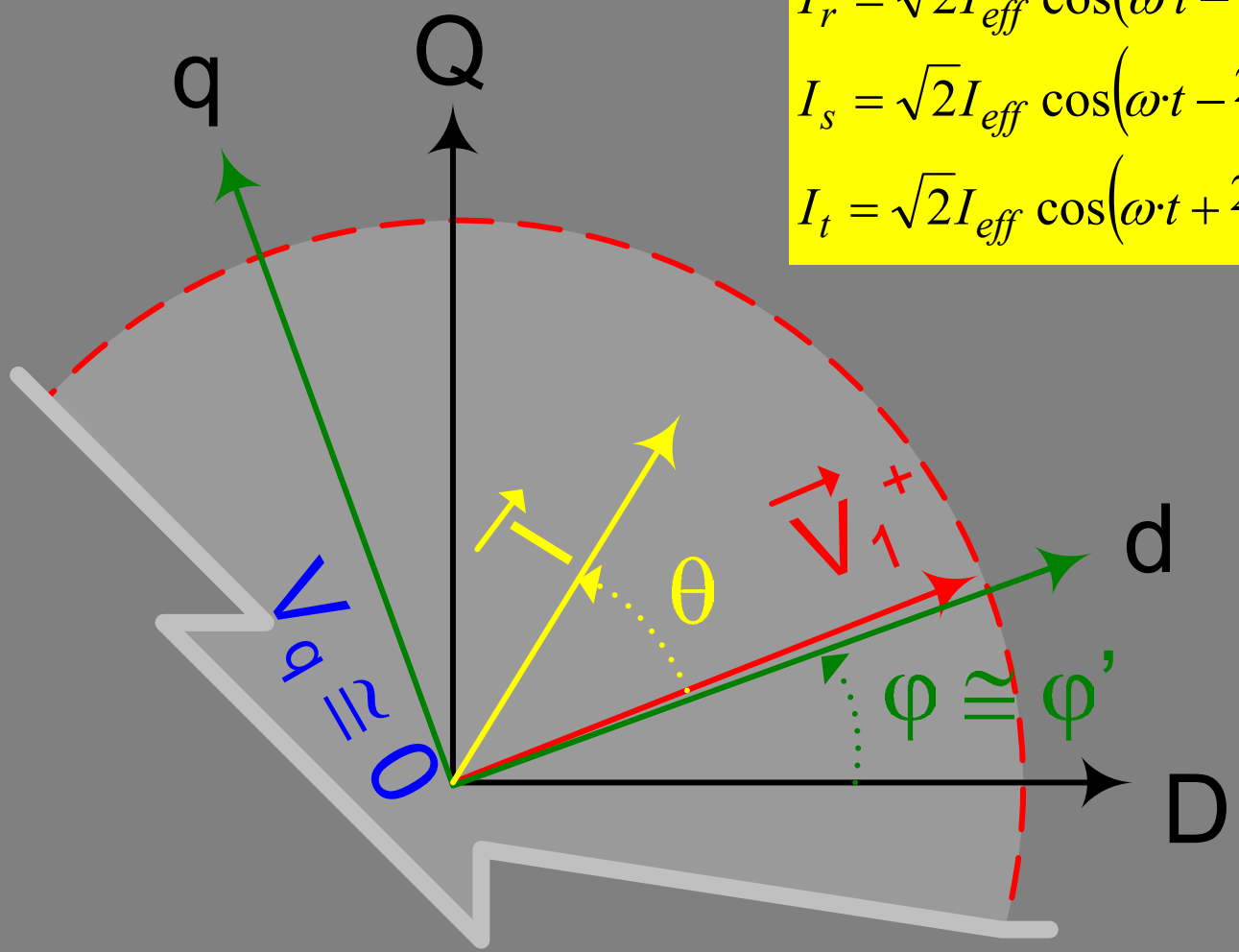

$$I_d = I_{eff} \cdot \cos(\theta)$$
$$I_q = I_{eff} \cdot \sin(\theta)$$

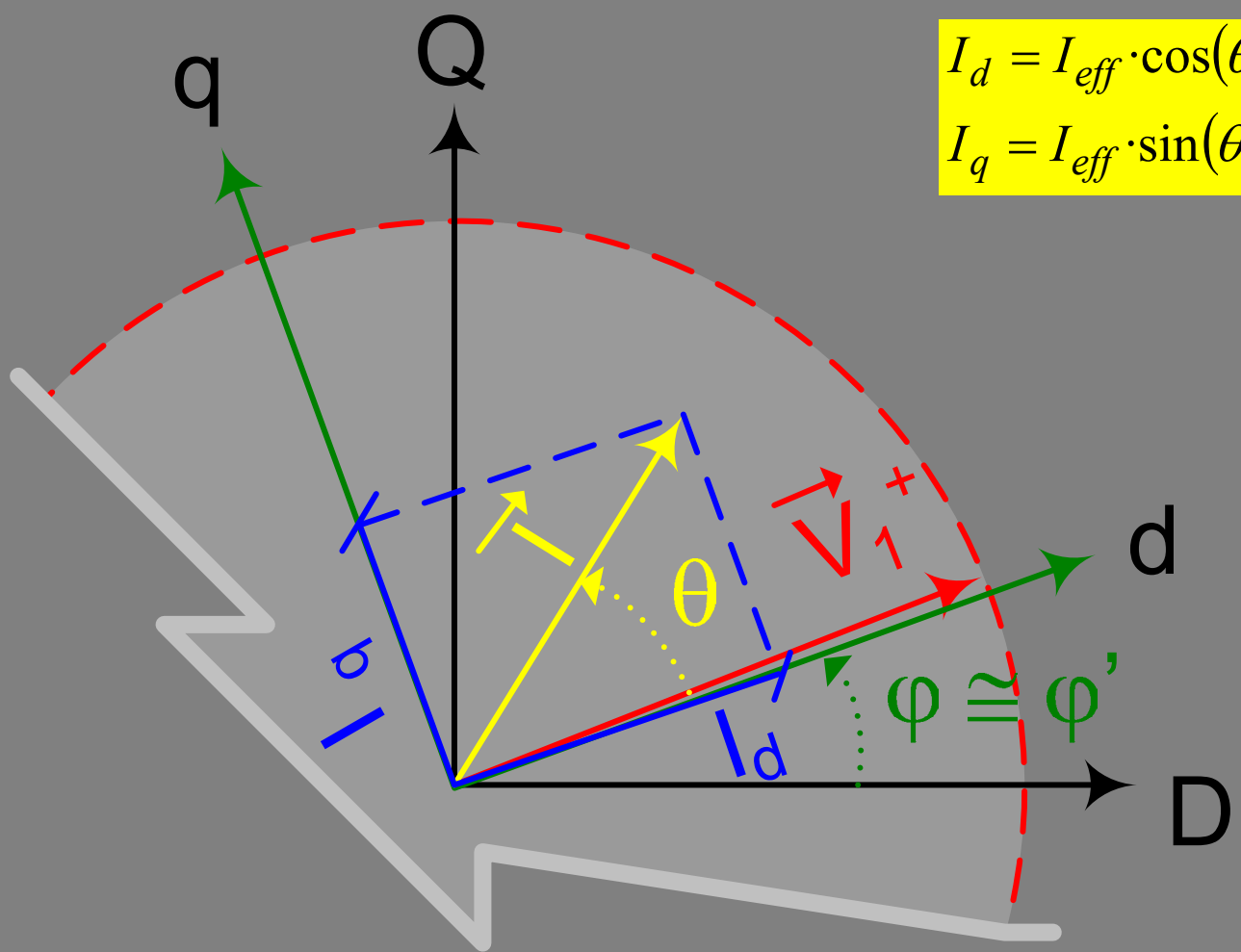

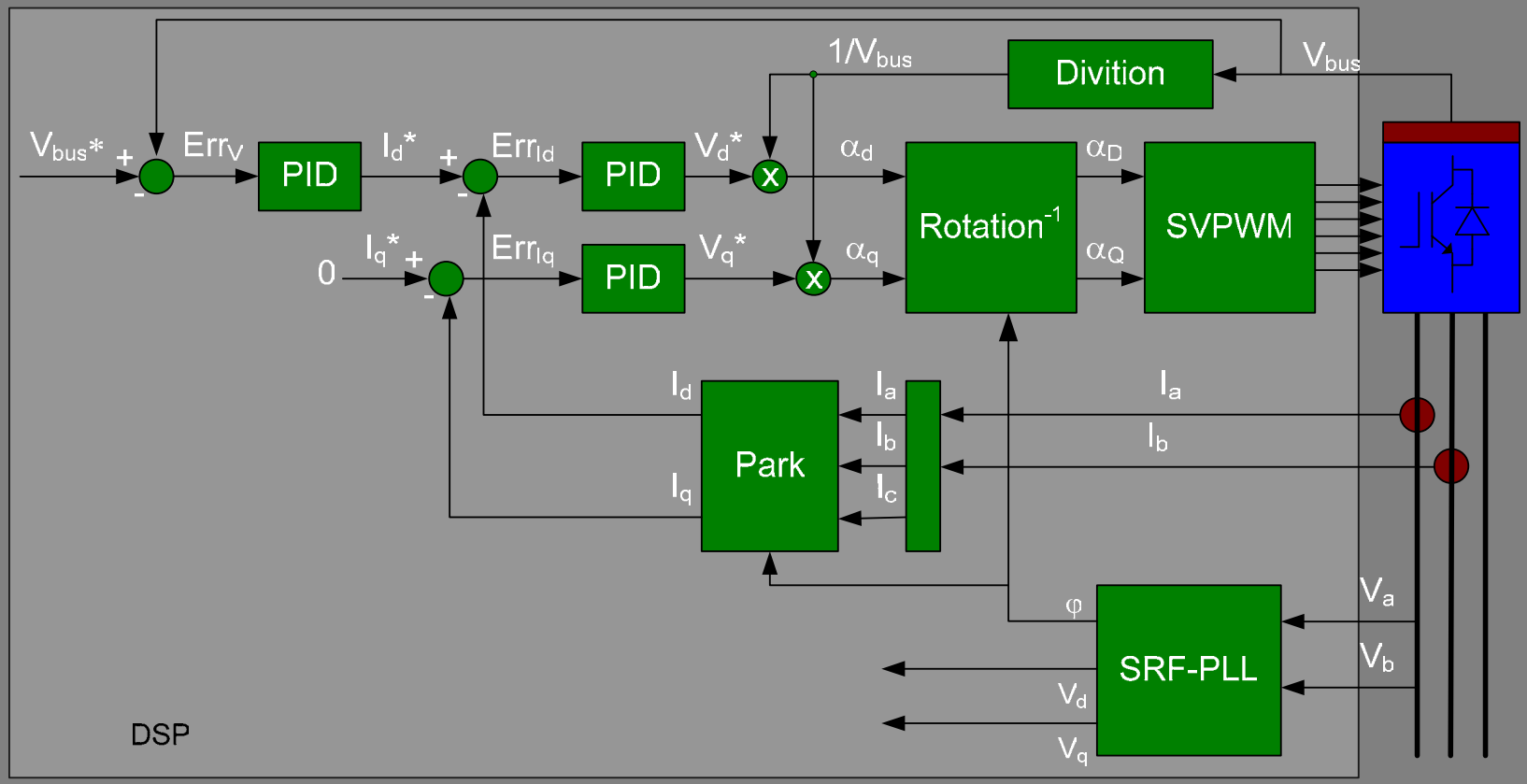
Vbus*
+
-
ErrV
PID
Id*
+
-
ErrId
PID
Vd*
x
1/Vbus
Divition
Vbus
αd
Rotation-1
αD
SVPWM
0
Iq*
+
-
ErrIq
PID
Vq*
x
αq
αQ
Id
Iq
Park
Ia
Ib
Ic
Ia
Ib
φ
SRF-PLL
Vd
Vq
Va
Vb
DSP

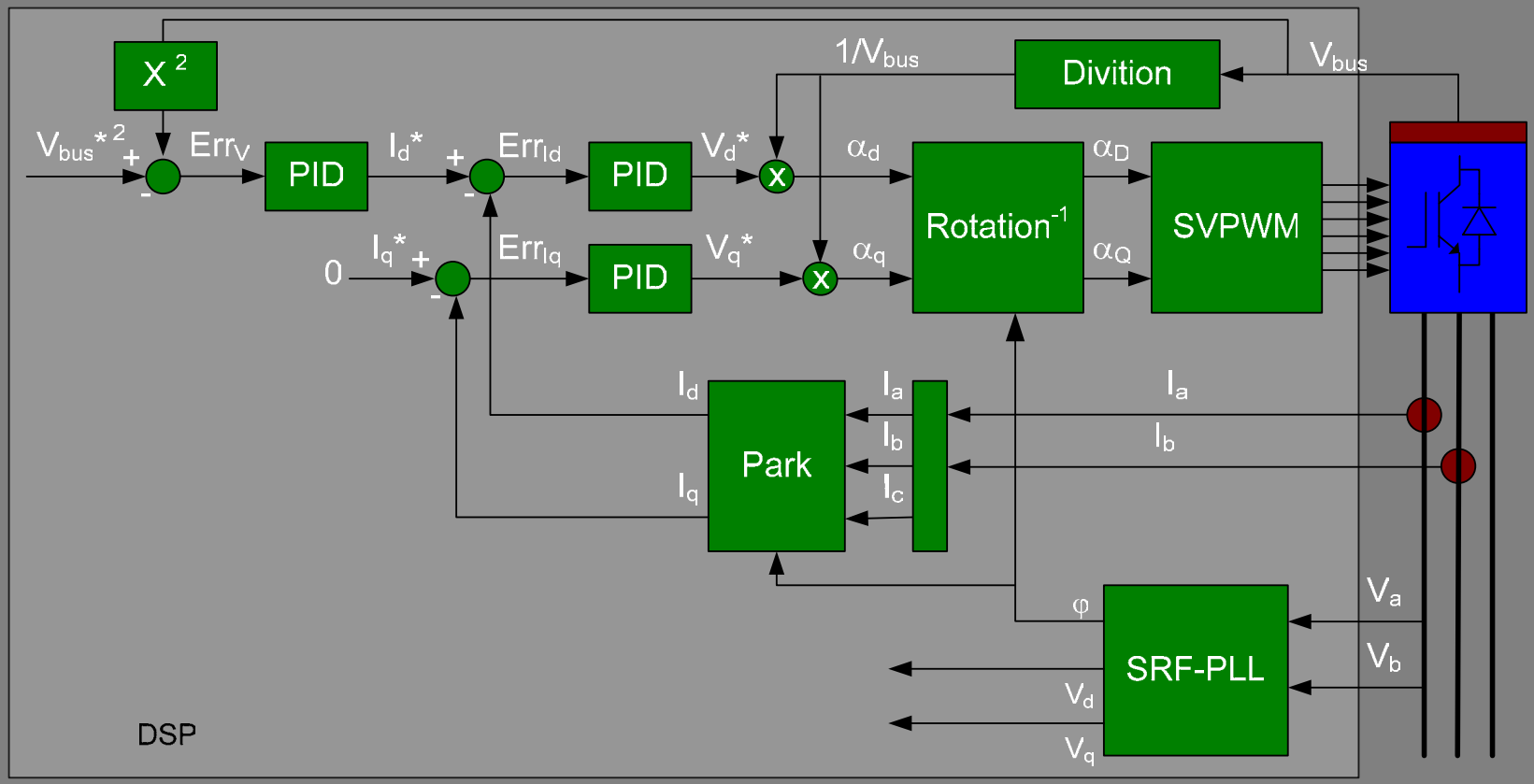
X 2
Vbus*2
ErrV
PID
Id*
ErrId
PID
Vd*
1/Vbus
Divition
Vbus
αd
αD
Rotation-1
SVPWM
0
Iq*
ErrIq
PID
Vq*
αq
αQ
Id
Ia
Ib
Ic
Park
Iq
Ia
Ib
φ
SRF-PLL
Va
Vb
Vd
Vq
DSP

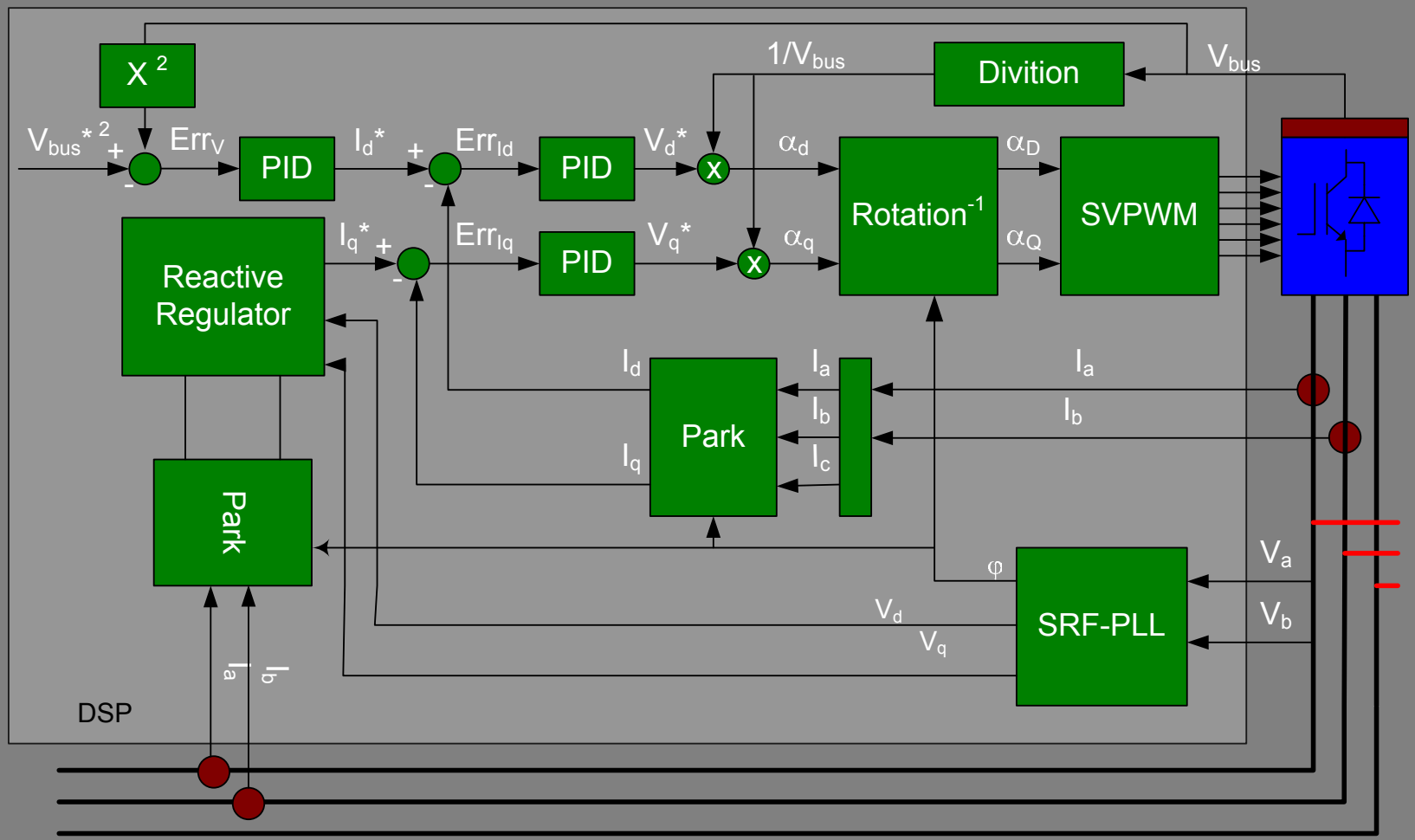
X 2
Vbus* 2
ErrV
PID
Id*
ErrId
PID
Vd*
1/Vbus
Divition
Vbus
αd
αD
Rotation-1
SVPWM
Iq*
ErrIq
PID
Vq*
αq
αQ
Reactive Regulator
Id
Ia
Ib
Ic
Iq
Park
Ia
Ib
Park
φ
Va
Vd
Vb
Vq
SRF-PLL
Ia
Ib
DSP

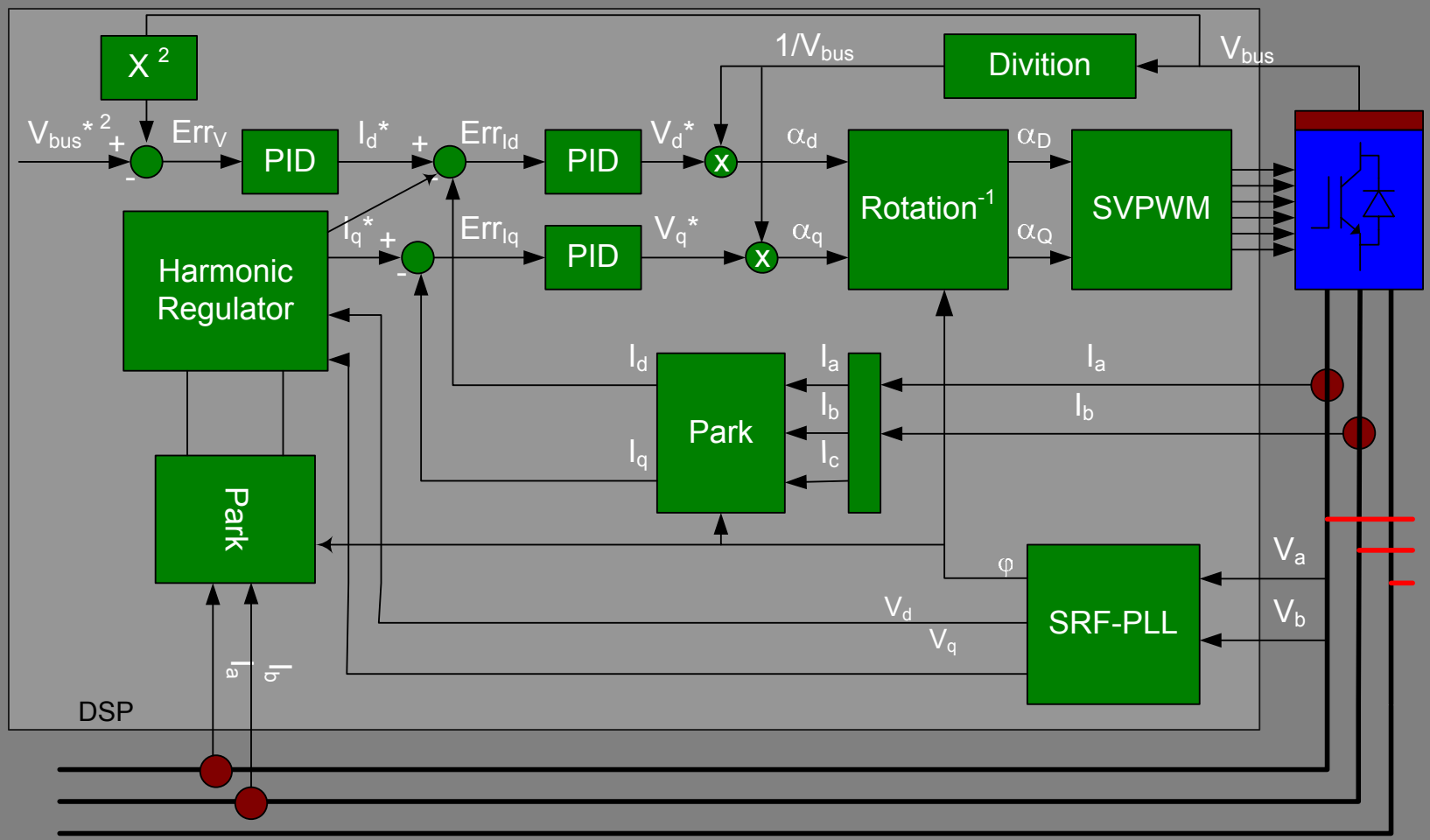
X 2
Vbus* 2
+
-
ErrV
PID
Id*
+
ErrId
PID
Vd*
x
αd
1/Vbus
Divition
Vbus
Rotation-1
αD
SVPWM
Harmonic Regulator
Iq*
+
-
ErrIq
PID
Vq*
x
αq
αQ
Id
Iq
Park
Ia
Ib
Ic
Ia
Ib
Park
Ia
Ib
φ
Vd
Vq
SRF-PLL
Va
Vb
DSP

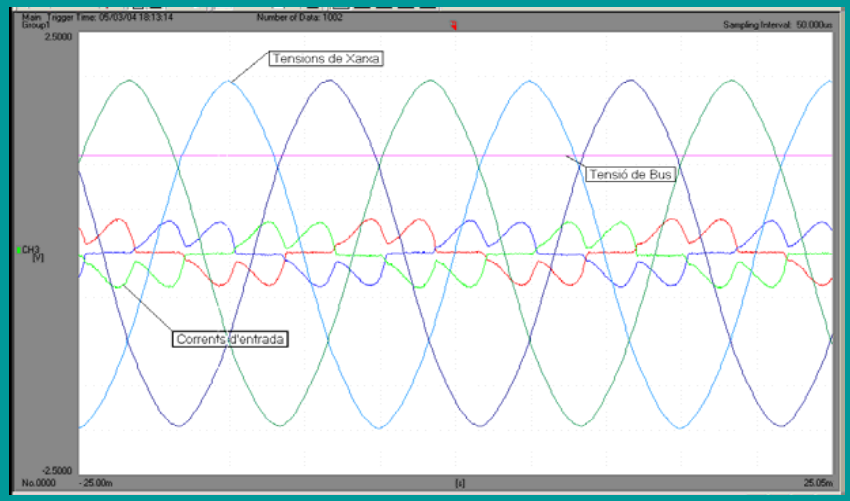
Tensions de Xarxa
Tensió de Bus
Corrents d'entrada

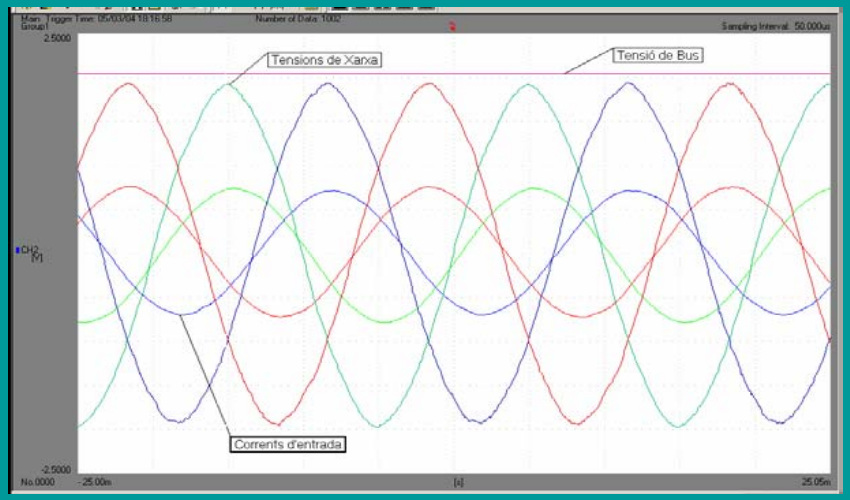
Tensions de Xarxa
Tensió de Bus
Corrents d'entrada

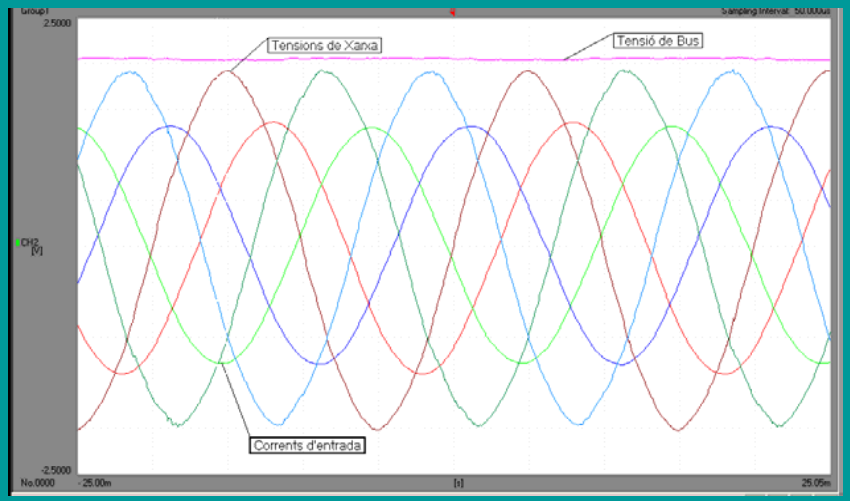
Tensions de Xarxa
Tensió de Bus
Corrents d'entrada

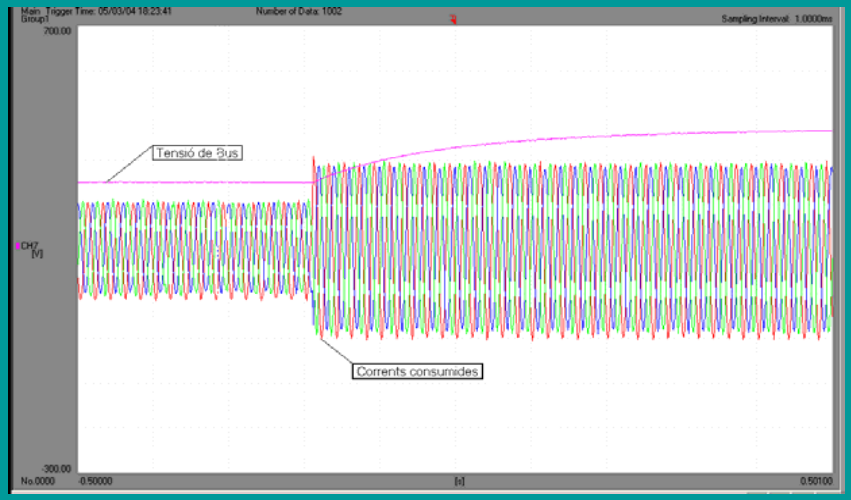
Tensió de Bus
Corrents consumides

Design and Control of Static Converters

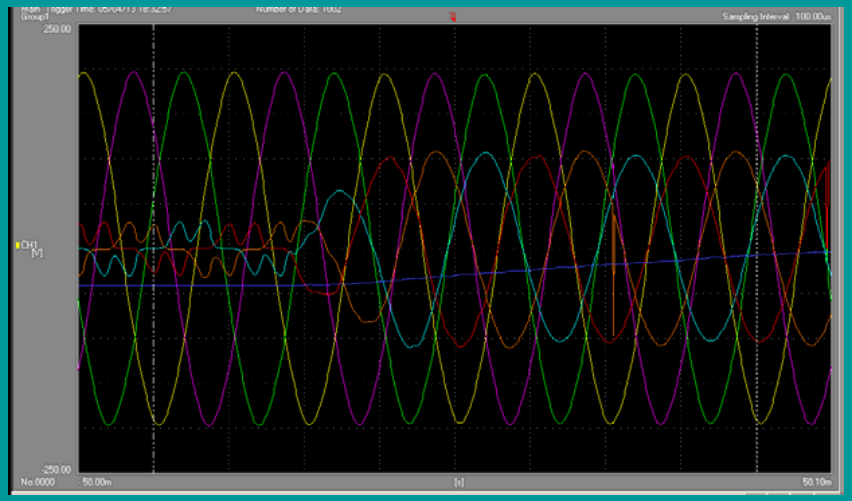

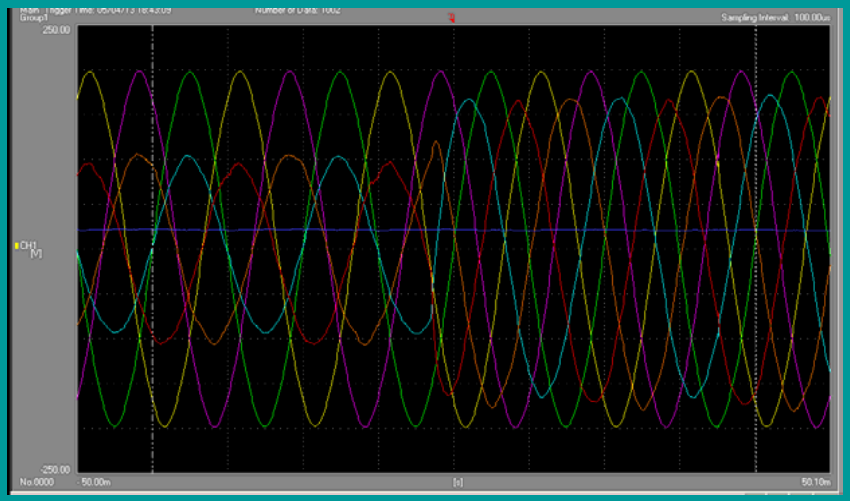

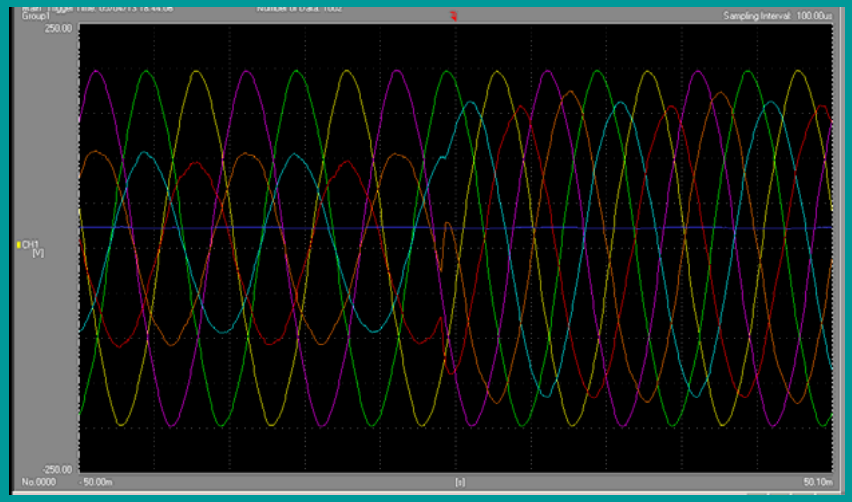

Back-to-Back

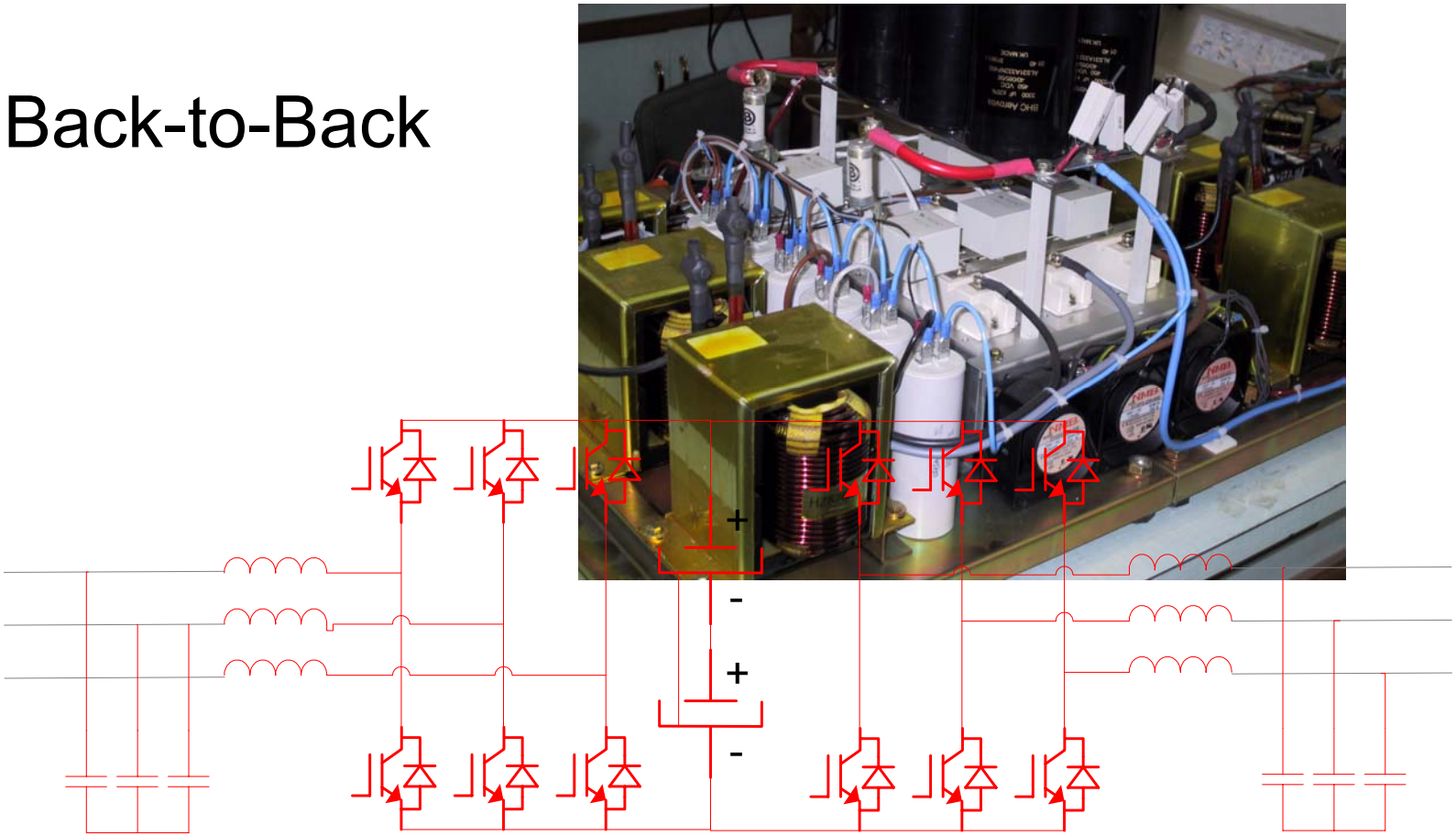

Design and Control of Static Converters

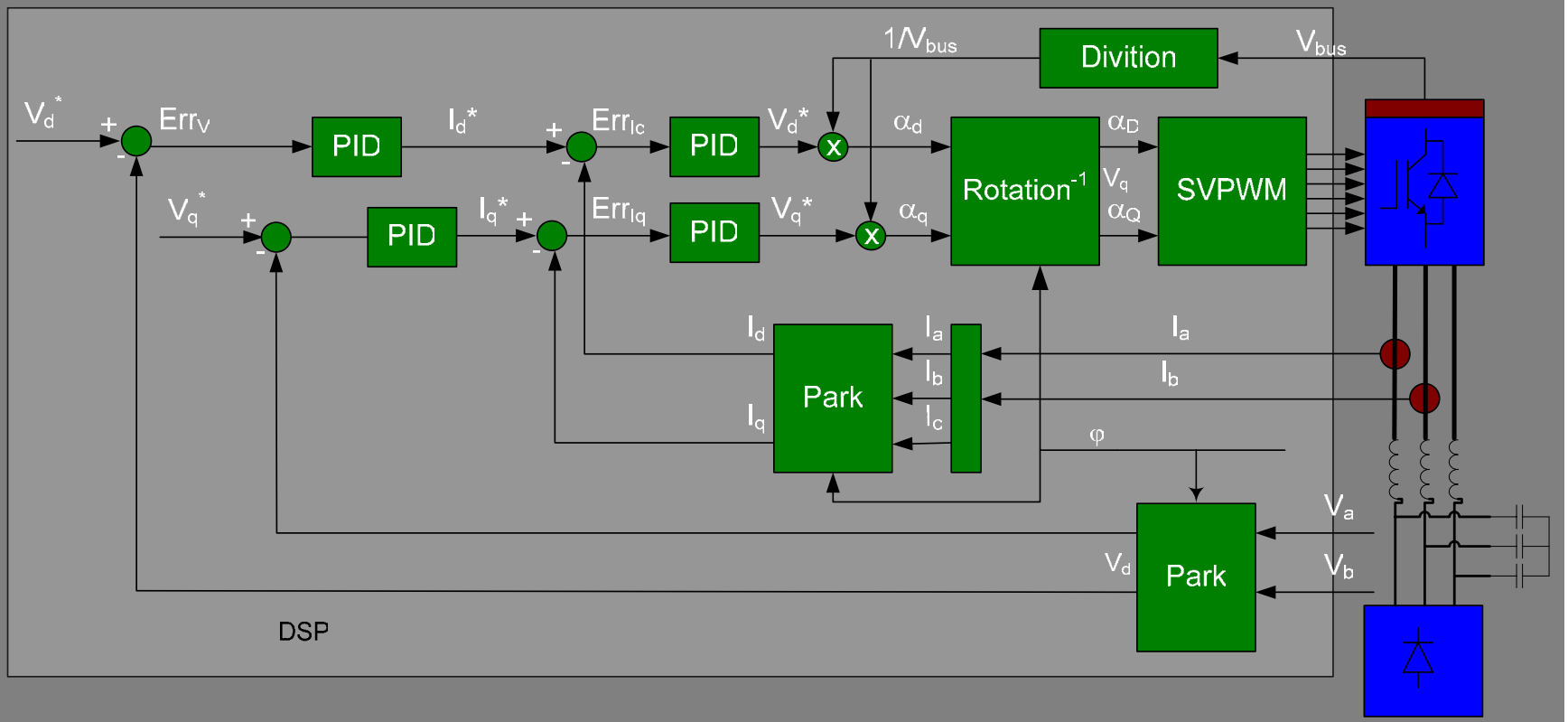

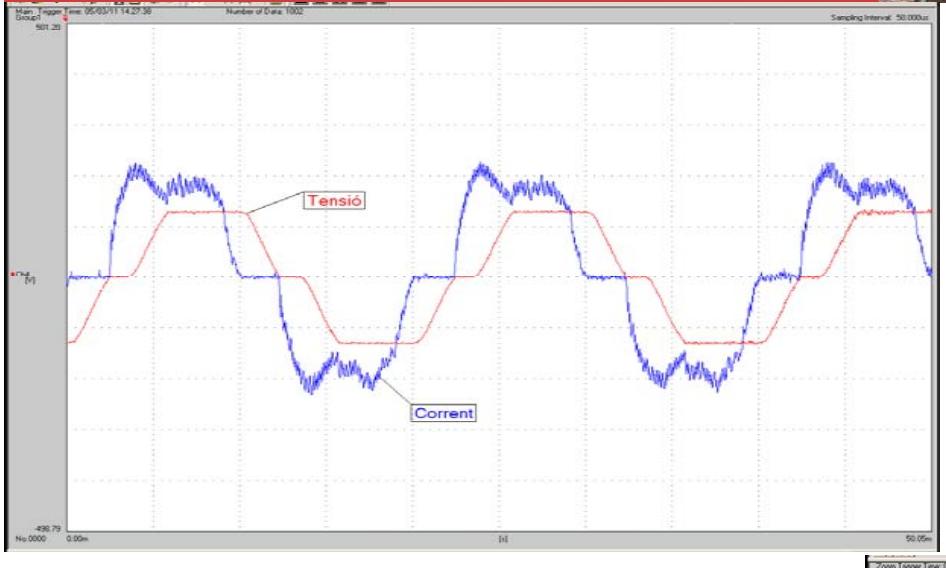
Tensió
Corrent

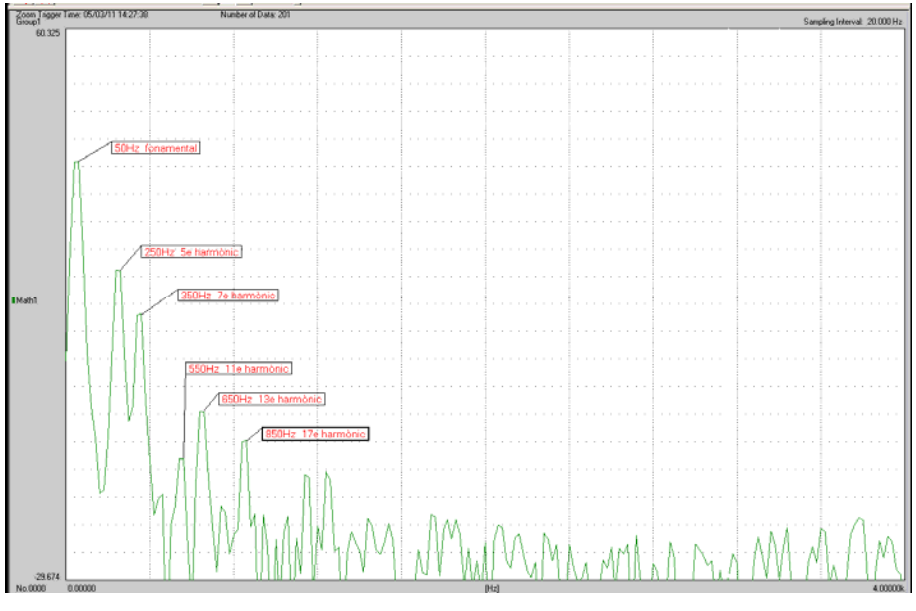
50Hz fonamental
250Hz 5e harmònic
350Hz 7e harmònic
550Hz 11e harmònic
650Hz 13e harmònic
850Hz 17e harmònic

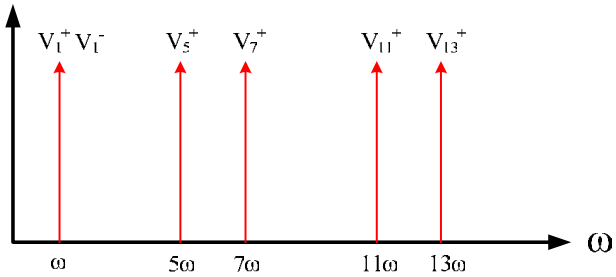

Harmonics	ω after rotation
V_1^+	DC
V_1^-	-2 ω
V_5^+	-6 ω
V_7^+	6 ω
V_{11}^+	-12 ω
V_{13}^+	12 ω

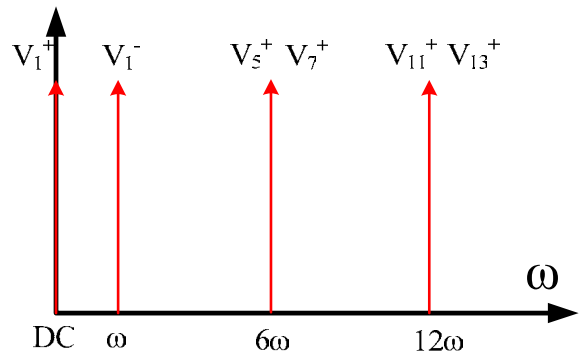

All Pass Filter

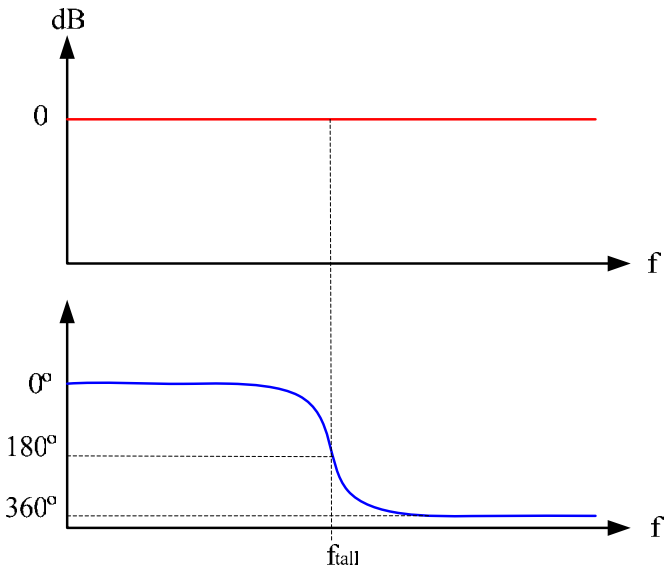

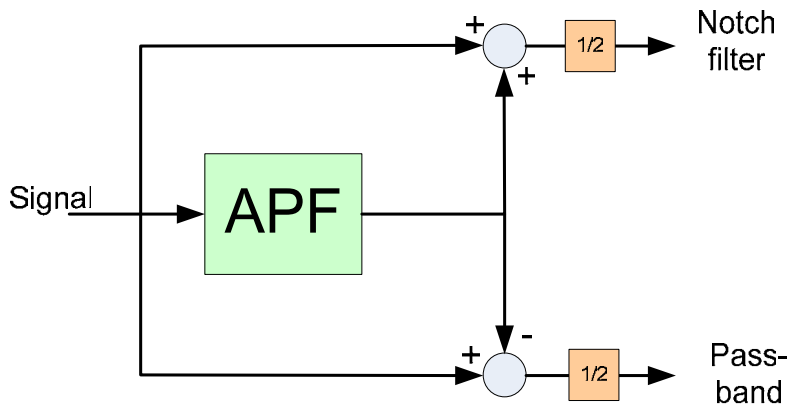

Design and Control of Static Converters

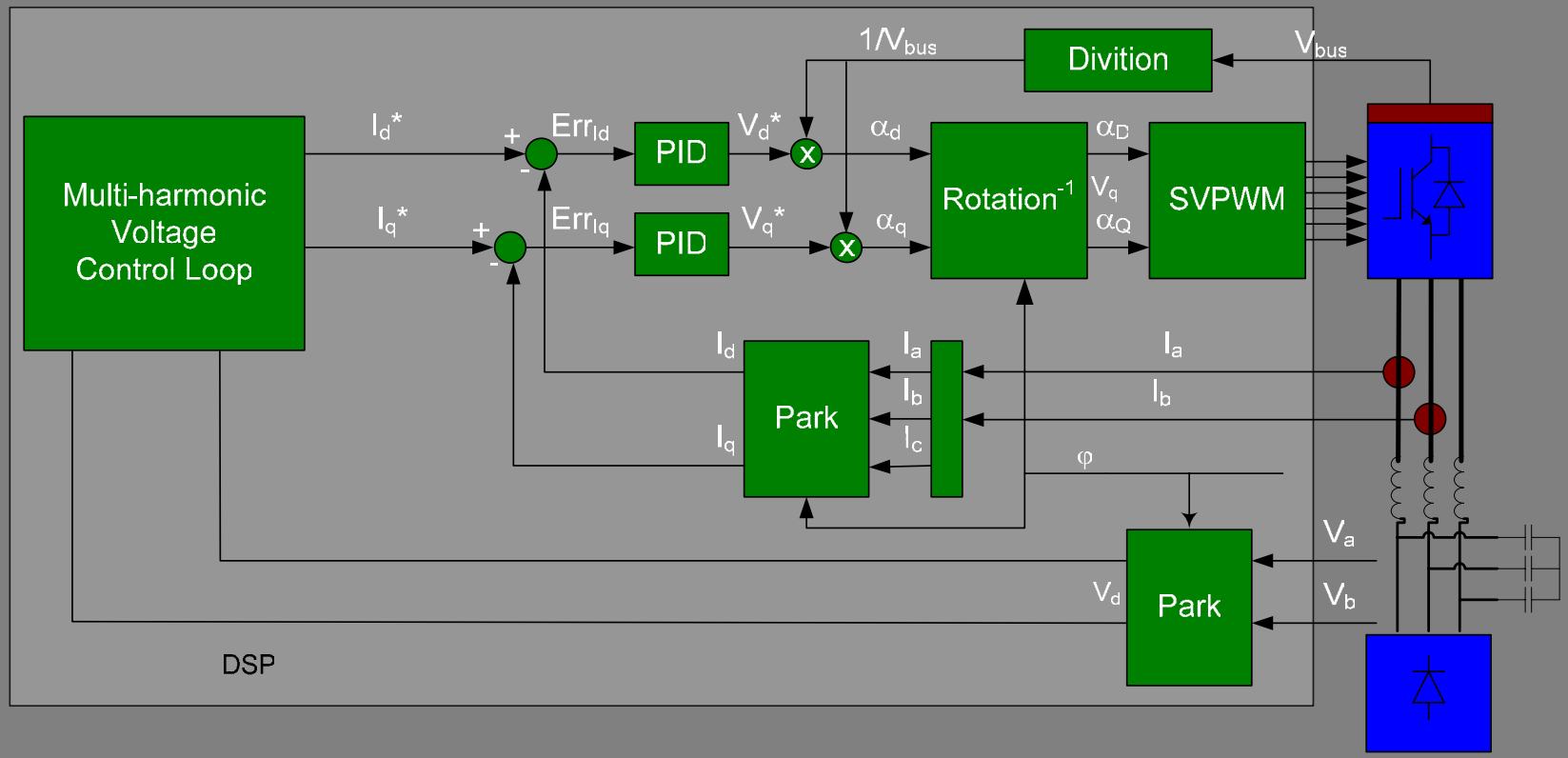

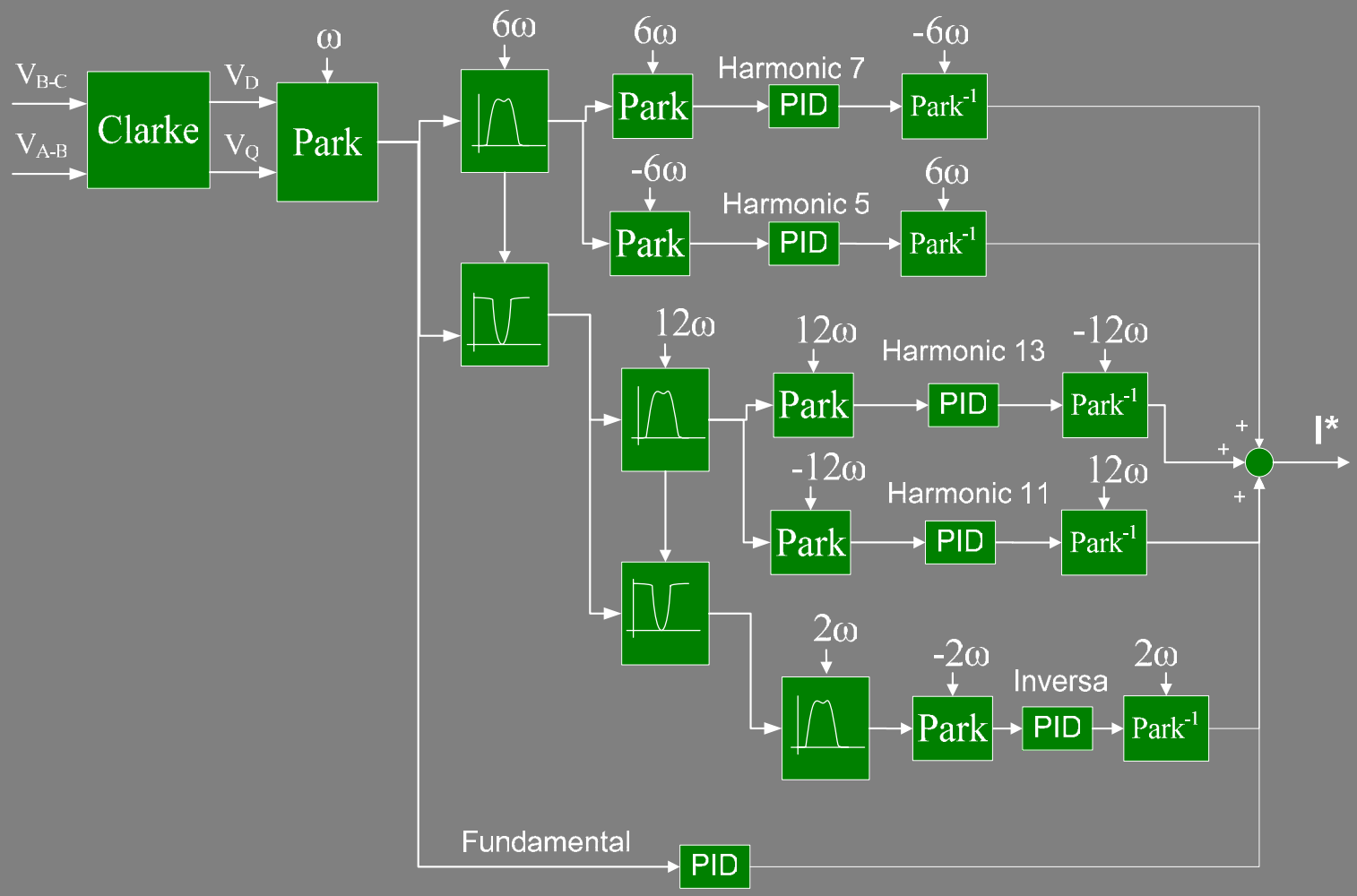
V_{B-C}
V_{A-B}
Clarke
V_D
V_Q
ω
Park
6ω
6ω
Park
Harmonic 7
PID
-6ω
Park^{-1}
-6ω
Park
Harmonic 5
PID
6ω
Park^{-1}
12ω
12ω
Park
Harmonic 13
PID
-12ω
Park^{-1}
-12ω
Park
Harmonic 11
PID
12ω
Park^{-1}
2ω
-2ω
Park
Inversa
PID
2ω
Park^{-1}
Fundamental
PID
+
+
+
I*

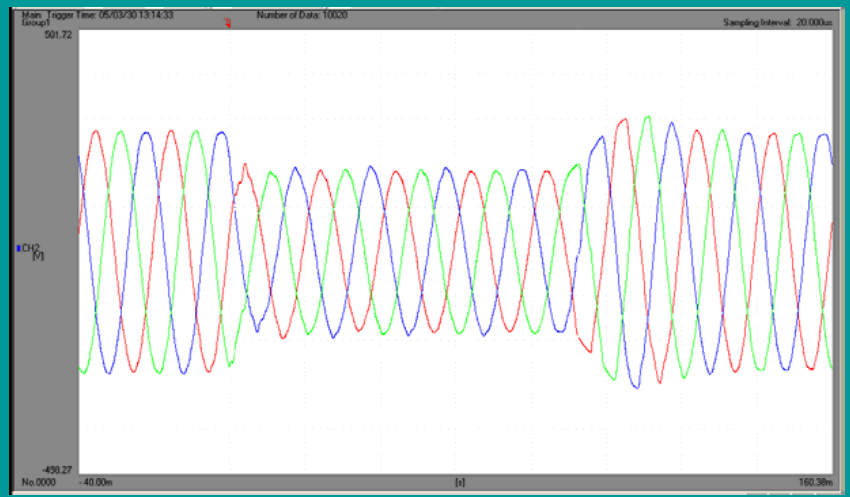

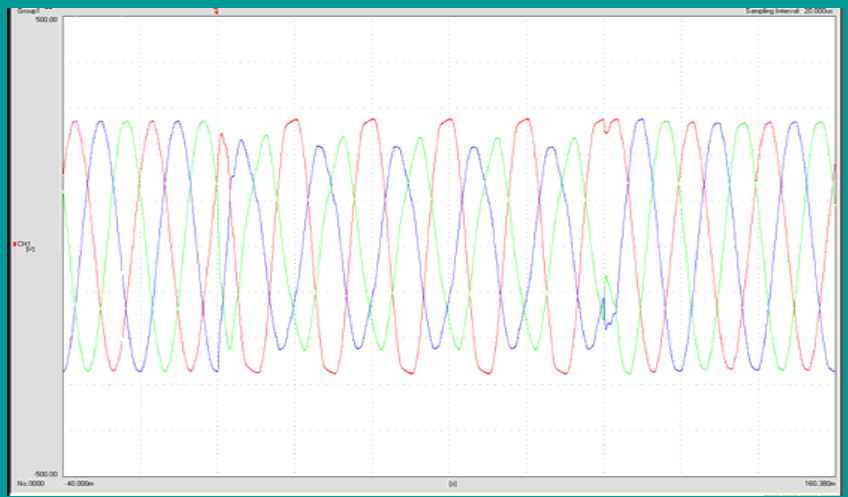

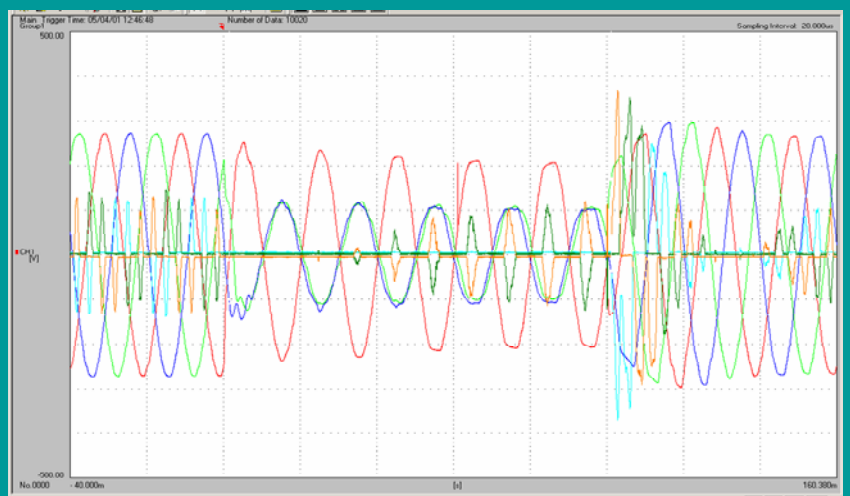

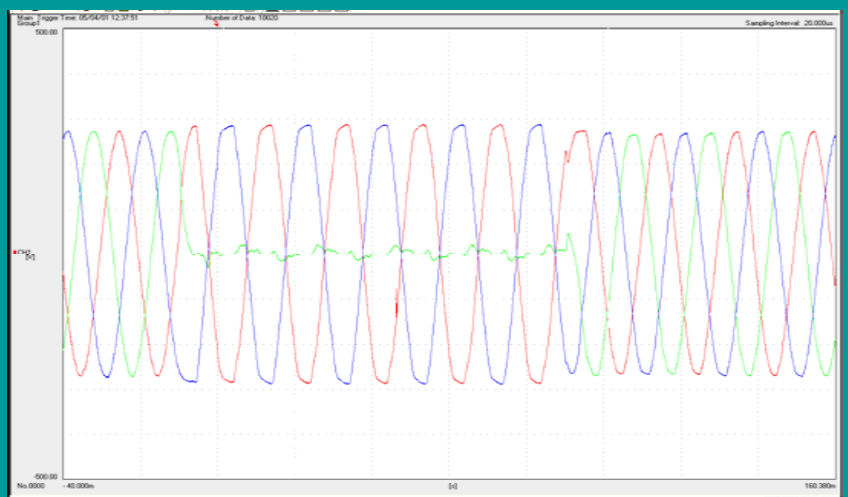

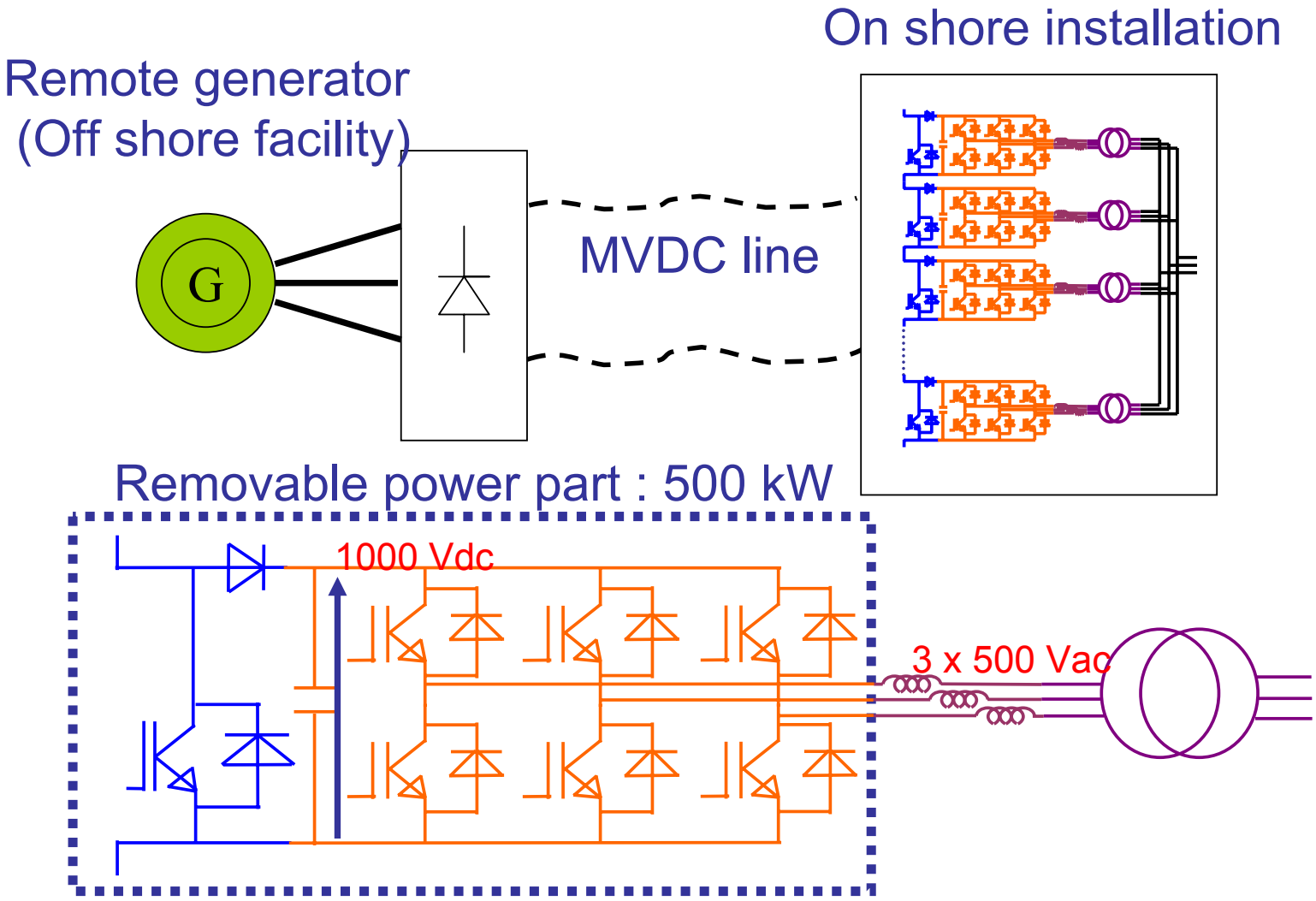
On shore installation
Remote generator
(Off shore facility)
G
MVDC line
Removable power part : 500 kW
1000 Vdc
3 x 500 Vac