Are nonlinear controllers really necessary in switched power electronics?

H. Sira-Ramírez
(*IEEE Distinguished Lecturer*)
CINVESTAV-IPN
Departamento de Ing. Eléctrica
Sección de Mecatrónica
México, D.F., México
y
Universidad de Castilla La Mancha
E.T.S.I. Industriales
Ciudad Real

Seminar at Univ. Pontificia de Comillas
Madrid, June 17th 2005
Sponsored by the IEEE PELS Spanish Chapter

Abstract

In this talk we demonstrate that for a large class of switched power electronics devices, linear-time-varying state feedback controllers, based on exact tracking error dynamics passive output feedback, semi-globally stabilizes the tracking error to zero. The dynamic average model of a large variety of power electronics devices is shown to conform to a special "energy managing" structure including an invariant field, a dissipative field, an external power source field and a control field. For this kind of structure, a dissipation matching condition between the dissipative field and the control field must be satisfied for the simple proposed feedback scheme to be applicable.

In fact, it is found that the time-varying linear feedback controller found by use of passivity principles on the exact nonlinear tracking error dynamics precisely coincides with the feedback controller designed on the basis of approximate tangent linearization around a given, desired, state and control input trajectory. The differential flatness property of the system is found to be crucial for the determination of the off-line computed feed-forward terms appearing in the proposed controllers.

DC to DC power converters, switched DC to AC inverters, power factor pre-compensators, switched rectifiers and combinations of these devices with some electromechanical systems, such as dc and ac motors, are shown to fall within this category of systems. A detailed controller design example for a composite three phase rectifier-dc motor system is presented for illustrative purposes.

Contents of presentation

- A general model for power devices
- Differential flatness
- Sigma-Delta modulation
- A power factor pre-compensator
- A boost three phase rectifier
- A three phase rectifier-DC motor system
- Conclusions

A general model for power devices

Consider the following general *average model* of a power electronic device

$$\begin{aligned} \mathcal{A}\dot{x} &= \mathcal{J}(u_{av})x - \mathcal{R}x + \mathcal{B}u_{av} + \mathcal{E}(t) \\ y &= \mathcal{B}^T x \end{aligned} \tag{1}$$

where: x is an n-dimensional vector, $\mathcal{A}$ is a symmetric, positive definite, constant, matrix, $\mathcal{J}(u_{av})$ is a skew symmetric matrix, for all u_{av}, of the form:

$$\mathcal{J} = \mathcal{J}_0 + \sum_{i=1}^{m} \mathcal{J}_i u_{i\ av} \tag{2}$$

where $\mathcal{J}_0$ is constant and skew symmetric and $\mathcal{J}_i$ is also a constant skew symmetric matrix for all i. $\mathcal{R}$ is a symmetric, positive semi-definite constant matrix. $\mathcal{B}$ is a constant $n \times m$ matrix and, hence y is an m dimensional output vector.

For instance, in the normalized "boost" converter, we have:

$$b = 0, \quad \mathcal{J} = \begin{bmatrix} 0 & -u \\ u & 0 \end{bmatrix}, \quad \mathcal{E} = \begin{bmatrix} 1 \\ 0 \end{bmatrix}$$

$$\mathcal{R} = \begin{bmatrix} 0 & 0 \\ 0 & -\frac{1}{Q} \end{bmatrix}$$

while in the "quadratic" converter

$$b = \begin{bmatrix} 1 \\ 0 \\ 0 \\ 0 \end{bmatrix}, \quad \mathcal{E} = 0, \quad \mathcal{J}(u) = \begin{bmatrix} 0 & -1 & 0 & 0 \\ 1 & 0 & -u & 0 \\ 0 & u & 0 & -1 \\ 0 & 0 & 1 & 0 \end{bmatrix}$$

$$\mathcal{R} = \begin{bmatrix} 0 & 0 & 0 & 0 \\ 0 & 0 & 0 & 0 \\ 0 & 0 & 0 & 0 \\ 0 & 0 & 0 & -\frac{1}{Q} \end{bmatrix}$$

In the (multivariable) "boost-boost" converter case

$$B = 0, \quad \mathcal{E} = [1\ 0\ 0\ 0]^T \quad \mathcal{J}(u) = \begin{bmatrix} 0 & -u_1 & 0 & 0 \\ u_1 & 0 & -1 & 0 \\ 0 & 1 & 0 & -u_2 \\ 0 & 0 & u_2 & 0 \end{bmatrix}$$

$$\mathcal{R} = \begin{bmatrix} 0 & 0 & 0 & 0 \\ 0 & -\frac{1}{Q_1} & 0 & 0 \\ 0 & 0 & 0 & 0 \\ 0 & 0 & 0 & -\frac{1}{Q_L} \end{bmatrix}$$

Also in a three phase boost rectifier we have the same model

$$\frac{d}{d\tau}\begin{bmatrix} z_1 \\ z_2 \\ z_3 \\ z_4 \end{bmatrix} = \begin{bmatrix} 0 & 0 & 0 & -u_{1,av} \\ 0 & 0 & 0 & -u_{2,av} \\ 0 & 0 & 0 & -u_{3,av} \\ u_{1,av} & u_{2,av} & u_{3,av} & 0 \end{bmatrix}\begin{bmatrix} z_1 \\ z_2 \\ z_3 \\ z_4 \end{bmatrix}$$
$$-\begin{bmatrix} Q & 0 & 0 & 0 \\ 0 & Q & 0 & 0 \\ 0 & 0 & Q & 0 \\ 0 & 0 & 0 & \frac{1}{Q_L} \end{bmatrix}\begin{bmatrix} z_1 \\ z_2 \\ z_3 \\ z_4 \end{bmatrix} + \begin{bmatrix} \cos(\omega_n \tau) \\ \cos(\omega_n \tau - \frac{2\pi}{3}) \\ \cos(\omega_n \tau + \frac{2\pi}{3}) \\ 0 \end{bmatrix}$$

In terms of its n dimensional column vectors, the matrix $\mathcal{B}$ is given by $\mathcal{B} = [b_1, b_2, \cdots, b_m]$. The vector u_{av} is the average control input vector assumed to be m-dimensional, with each component $u_{i\,av}$ taking values either in the closed set $[0, 1]$, or in the closed set $[-1, 1]$, of the real line. In any case, $u_{i\,av}$ represents a *bounded* average control input function. $\mathcal{E}(t)$ is a n-dimensional smooth vector function of t or, sometimes, a vector of constant entries.

Note that the matrix $\mathcal{R}$ represents the *dissipative field* of the system while $\mathcal{J}(u)$ represents the, possibly control input dependent, *conservative field* of the system. The *control input channels* are represented by the constant matrix $\mathcal{B}$ while $\mathcal{E}(t)$ represent *external input sources*, such as batteries or ac line voltages.

We let, $\mathcal{B}^*(t)$, represent the time varying matrix:

$$\mathcal{B}^*(t) = [\mathcal{J}_1 x^* + b_1, \cdots, \mathcal{J}_m x^* + b_m] \qquad (3)$$

Basic assumptions

• We assume that $u_{i\,av} \in [0,1]$ for all t. The results are equally valid when $u_{i\,av} \in [-1,1]$.

• System (1)-(2) is *Flat* (see Fliess and, also, Sira-Ramírez and Agrawal). This property guarantees valid the following statement: Given an arbitrary feasible smooth bounded reference state trajectory $x^*(t)$ in R^n, there exists a smooth open loop bounded control input, $u^*(t) \in [0,1]^m$, such that for all trajectories starting at time t_0, at the state $x(t_0) = x^*(t_0)$, the tracking error vector $e(t) = x(t) - x^*(t)$ is identically zero for all $t \in [t_0, +\infty)$. In other words, the unperturbed relation:

$$\begin{aligned} \mathcal{A}\dot{x}^*(t) &= \mathcal{J}(u^*(t))x^*(t) - \mathcal{R}x^*(t) + \mathcal{B}u^*(t) + \mathcal{E}(t) \\ y^* &= \mathcal{B}^T x^* \end{aligned} \tag{4}$$

is valid for all times with a given $x^*(t_0)$ which renders the components of the open loop nominal control input vector $u^*(t)$ bounded in the interval $[0,1]$, for all $t \geq t_0$.

• The following *dissipativity matching* condition is satisfied: For any constant, positive definite, symmetric matrix Γ the following relation is uniformly satisfied

$$\mathcal{R} + \mathcal{B}^*(t)\Gamma\left[\mathcal{B}^*(t)\right]^T > 0 \tag{5}$$

Roughly speaking, the dissipativity matching condition establishes that whatever does not lie in the image of the dissipation field of the system, then it lies in the image of the control input map that is pertinent to stability. i.e., those subspaces in which the system does not exhibit a natural dissipation, or self-stabilizing action, this can, nevertheless, be properly affected by feedback synthesized dissipation.

• We assume, for the sake of simplicity, that *all* states are available for measurement. This means that any output function vector is known in terms of the measured states. An observer based approach of our main results is currently under development.

Fundamental results

Theorem. *Let* $z = [\mathcal{B}^*(t)]^T x$ *and* $e_z = [\mathcal{B}^*(t)]^T e$. *Under the previous assumptions on the system (1)-(2), the tracking error vector* $e(t) = x(t) - x^*(t)$ *is semi-globally asymptotically exponentially stabilized to zero when the following linear time-varying tracking error feedback controller is used:*

$$u = u_{av}^* - \Gamma \left[\mathcal{B}^*(t)\right]^T e = u_{av}^* - \Gamma e_z \qquad (6)$$

The weakening of condition (5) to a positive semi-definite condition, will still produce an asymptotic stability result, provided the LaSalle's invariance condition is satisfied. In other words, whenever the set:

$$\left\{ e \in R^n \mid e^T \left[\mathcal{R} + \mathcal{B}^*(t) \Gamma \left[\mathcal{B}^*(t)\right]^T \right] e = 0 \right\}$$

contains only the element $e = 0$.

Proof

Let $e_u = u_{av} - u_{av}^*$ and note that, according to (2), the expression $\mathcal{J}(u_{av}) - \mathcal{J}(u_{av}^*)$ may be written as follows:

$$\mathcal{J}(u_{av}) - \mathcal{J}(u_{av}^*) = \sum_{i=1}^{m} \mathcal{J}_i [e_u]_i \qquad (7)$$

where $[e_u]_i$ is the i-th element of the control input error vector $e_u = u_{av} - u_{av}^*$.

We write an expression for the tracking error dynamics, obtained by using (1) and (4), as follows:

$$\begin{aligned}
\mathcal{A}\dot{e} &= [\mathcal{J}(u_{av})x - \mathcal{J}(u_{av}^*)x^*] - \mathcal{R}e + \mathcal{B}e_u \\
&= [\mathcal{J}(u_{av})(x - x^*) + \mathcal{J}(u_{av})x^* - \mathcal{J}(u_{av}^*)x^*] - \mathcal{R}e + \mathcal{B}e_u \\
&= \mathcal{J}(u_{av})e + [\mathcal{J}(u_{av}) - \mathcal{J}(u_{av}^*)]\, x^* - \mathcal{R}e + \mathcal{B}e_u \\
&= \mathcal{J}(u_{av})e - \mathcal{R}e + \left[\sum_{i=1}^{m} \mathcal{J}_i (e_u)_i\right] x^* + \mathcal{B}e_u \\
&= \mathcal{J}(u_{av})e - \mathcal{R}e + [\mathcal{J}_1 x^* + b_1, \cdots, \mathcal{J}_m x^* + b_m]\, e_u \\
&= \mathcal{J}(u_{av})e - \mathcal{R}e + \mathcal{B}^*(t)e_u
\end{aligned}$$

We refer to the dynamics,

$$\mathcal{A}\dot{e} \;=\; \mathcal{J}(u_{av})e - \mathcal{R}e + \mathcal{B}^*(t)e_u \qquad (8)$$

as the *exact open loop tracking error* dynamics. Note that the passive output error vector, associated with the error dynamics (8), is no longer $e_y = \mathcal{B}^T e$ but it is now given by $e_z = [\mathcal{B}^*(t)]^T e$, corresponding to the auxiliary output $z = [\mathcal{B}^*(t)]^T e$.

Take the following Lyapunov function candidate: $V(e) = \frac{1}{2}e^T\mathcal{A}e$. We have, by virtue of the skew symmetry of the matrix $\mathcal{J}(u)$, that for all u,

$$\begin{aligned}\dot{V}(e) &= e^T\mathcal{A}\dot{e} \\ &= -e^T\mathcal{R}e + e^T\mathcal{B}^*(t)e_u\end{aligned}$$

The choice of $e_u = u_{av} - u^*_{av}$, as in (6), yields

$$\dot{V}(e) = -e^T\left[\mathcal{R} + \mathcal{B}^*(t)\Gamma\left[\mathcal{B}^*(t)\right]^T\right]e < 0$$

The exponential stability follows after realizing that the positive definite symmetric matrix $\mathcal{R} + \mathcal{B}^*(t)\Gamma\,[\mathcal{B}^*(t)]^T$ is uniformly bounded by a constant symmetric matrix and the fact that $\mathcal{A}$ and $\mathcal{R}$ are also constant symmetric matrices. The second part of the theorem is clear.

Remark. *Clearly, the result* <u>*is not*</u> *global since the initial condition for the state vector x may be such that the control input actions hit a saturation boundary for some, or all, of its components and feedback may be permanently lost. The flatness property is most useful in finding state trajectories, on the basis of physically meaningful flat outputs trajectory planning, which result in bounded control input nominal trajectories as required.*

The linearized tracking error model dynamics

Consider the tangent linearization of the system (1)-(2) around the nominal state and input reference trajectories $(x^*(t), u^*(t))$. Defining, as before, $e = x - x^*$ and $e_u = u - u^*$, the approximate linear dynamics is clearly given by:

$$\begin{aligned}
\mathcal{A}\dot{e} &= \frac{\partial}{\partial x^T}\left[\mathcal{J}(u_{av})x - Rx + \mathcal{B}u_{av} - \mathcal{E}\right]\Big|_{(x^*,u^*_{av})} e \\
&\quad + \frac{\partial}{\partial [u_{av}]^T}\left[\mathcal{J}(u_{av})x - Rx + \mathcal{B}u_{av} - \mathcal{E}\right]\Big|_{(x^*,u^*_{av})} e_u \\
\mathcal{A}\dot{e} &= \mathcal{J}(u^*_{av})e - \mathcal{R}e + \frac{\partial \mathcal{J}(u_{av})x}{\partial u^T_{av}}\Big|_{(x^*,u^*_{av})} e_u + \mathcal{B}e_u
\end{aligned}$$

Note that $\mathcal{B}e_u + \frac{\partial \mathcal{J}(u_{av})x}{\partial u^T_{av}}|_{(x^*,u^*_{av})} e_u = \mathcal{B}^*(t)e_u$. Hence, the tangent approximation to the tracking error dynamics is given by

$$\begin{aligned}
\mathcal{A}\dot{e} &= \mathcal{J}(u^*_{av})e - \mathcal{R}e + \mathcal{B}^*(t)e_u \\
e_z &= [\mathcal{B}^*(t)]^T e
\end{aligned} \tag{9}$$

The exact open loop tracking error dynamics (8) and the tangent approximation (9) to this dynamics differ only in the first term of their right hand sides, i.e., in the exact tracking error dynamics we have the conservative field: $\mathcal{J}(u_{av})e$, while in the tangent linearization we have the conservative field: $\mathcal{J}(u^*_{av})e$. The rest of the constitutive fields in <u>both dynamics</u> are exactly *the same*. But note that, in either case, these conservative field terms have no influence whatsoever in the closed loop dynamics stability thanks to the skew symmetry of $\mathcal{J}(u)$ for all u and the nature of the chosen Lyapunov function candidate.

As a consequence, a stabilizing tracking error feedback controller that we may propose, on the basis of the linearizing or tangent approximation, may be equally given by the auxiliary passive output feedback controller (6). In other words, *the stabilizing tracking error controller that locally stabilizes the linearized tracking error system dynamics to the origin also semi-globally stabilizes to the origin the actual exact nonlinear tracking error dynamics*. This simple result seems to have been largely overlooked in the literature of the control of Power Electronics devices.

Differential Flatness

Consider, for simplicity, a SISO nonlinear system

$$\dot{x} = f(x, u), \;\; y = h(x) \;\; x \;\in\; R^n, \;\; u \;\in\; R, \;\; y \in R$$

The system is said to be *differentially flat*, or *flat* if there exists an *endogenous output* y, i.e., a *differential function* of the state

$$z = \psi(x, u, \cdots, u^{(\alpha)})$$

such that *all* system variables $\{x, y, u\}$ are *differentially parameterizable* in terms of z, i.e., there exist differential functions of z such that:

$$x = \Phi(z, \dot{z}, \cdots, z^{(n-1)}), \quad y = \eta(z, \dot{z}, \cdots, z^{(n-1)})$$

and

$$u = \Psi(z, \dot{z}, \cdots, z^{(n)})$$

Example

The average normalized model of a boost converter is flat

$$\begin{aligned}\dot{x}_1 &= -ux_2 + 1\\ \dot{x}_2 &= ux_1 - \frac{x_2}{Q}\end{aligned}$$

Indeed, the total average normalized stored energy

$$F = \frac{1}{2}\left[x_1^2 + x_2^2\right]$$

is the flat output, since

$$\begin{aligned}x_1 &= -\frac{Q}{2} + \sqrt{\frac{Q^2}{4} + (2F + \dot{F})}\\ x_2 &= \sqrt{Q\left[-\dot{F} - \frac{Q}{2} + \sqrt{\frac{Q^2}{4} + (2F + \dot{F})}\right]}\\ u &= -\frac{\ddot{F} - 1 - \frac{2}{Q^2}x_2^2}{x_2 + \frac{2}{Q}x_1x_2}\end{aligned}$$

Sigma-Delta modulation

Sigma-Delta ($\Sigma - \Delta$) modulation

Sigma Delta modulation is an important tool that will allow us to translate continuous (i.e. average) feedback controller design options into implementable switch controlled strategies with practically the same closed loop behavior.

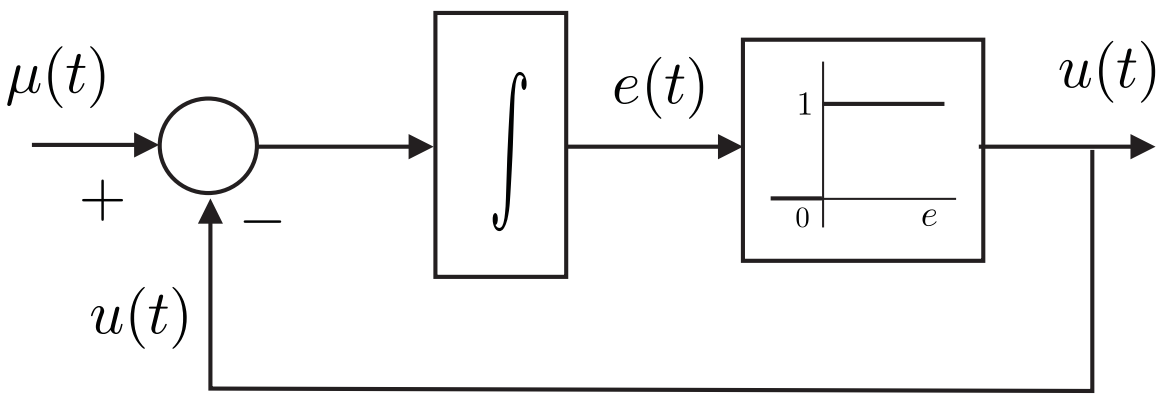

$\Sigma - \Delta$-modulator

Theorem

Consider the $\Sigma - \Delta$-modulator of the figure. Given a sufficiently smooth, bounded, signal $\mu(t)$, then the integral error signal, $e(t)$, converges to zero in a finite time, t_h, and, moreover, from any arbitrary initial value, $e(t_0)$, a sliding motion exists on the perfect encoding condition surface, represented by $e = 0$, for all $t > t_h$, provided the following *encoding condition* is satisfied for all t,

$$0 < \mu(t) < 1 \tag{10}$$

Proof.

The variables in the $\Sigma - \Delta$-modulator satisfy the following relations:

$$\begin{aligned} \dot{e} &= \mu(t) - u \\ u &= \frac{1}{2}[1 + \text{sign}(e)] \end{aligned}$$

The quantity $e\dot{e}$ is given by:

$$\begin{aligned} e\dot{e} &= e\left[\mu - \frac{1}{2}(1 + \text{sign}(e))\right] \\ &= -|e|\left[\frac{1}{2}(1 + \text{sign}(e)) - \mu\text{sign}(e)\right] \end{aligned}$$

For $e > 0$ we have $e\dot{e} = -e(1 - \mu)$, which, according with the assumption in (10) leads to $e\dot{e} < 0$. On the other hand, when $e < 0$, we have $e\dot{e} = -|e|\mu < 0$.

A sliding regime exists then on $e = 0$ for all time t after the hitting time t_h. Under ideal sliding, or encoding, conditions, $e = 0, \dot{e} = 0$, we have that the, so called, equivalent value of the switched output signal, u, denoted by $u_{eq}(t)$ satisfies:

$$u_{eq}(t) = \mu(t)$$

An estimate of the hitting time t_h is obtained by examining the modulator system equations with the worst possible bound for the input signal μ in each of the two conditions: $e > 0$ and $e < 0$, along with the corresponding value of u.

Consider then $e(0) > 0$ at time $t = 0$. We have for all $0 < t \leq t_h$,

$$\begin{aligned} e(t) &= e(0) + \int_0^t (\mu(\sigma) - u(\sigma))d\sigma \\ &\leq e(0) + t\left[\sup_{t\in[0,t]} \mu(t) - 1\right] \\ &< e(0) + t_h\left[\sup_t \mu(t) - 1\right]. \end{aligned} \tag{11}$$

Since $e(t_h) = 0$, we have:

$$t_h \leq \frac{e(0)}{1 - \sup_t \mu(t)} \tag{12}$$

The average $\Sigma-\Delta$-modulator output u_{eq}, ideally yields the modulator's input signal $\mu(t)$ in an *equivalent control* sense.

To illustrate, by means of simulations, the feature just stated about $\Sigma - \Delta$ modulation, we let: $\mu(t) = 0.5(1 + A\sin(\omega t))$ with $A = 0.8$, $\omega = 3$ rad/s. At the output of the modulator, we place a second order low pass filter of the form:

$$y = \frac{\omega_n^2}{s^2 + 2\zeta\omega_n s + \omega_n^2}$$

with $\zeta = 0.81$ and $\omega_n = 30$. We may compare the filter output y with the input signal $\mu(t)$: modulo a small delay and the second order filter transient from zero initial conditions, the filtering of the switched output signal, $u(t)$, of the modulator, represented by the variable $y(t)$, faithfully reproduces the sinusoidal input to the modulator.

Filtered response of a $\Sigma - \Delta$ modulator

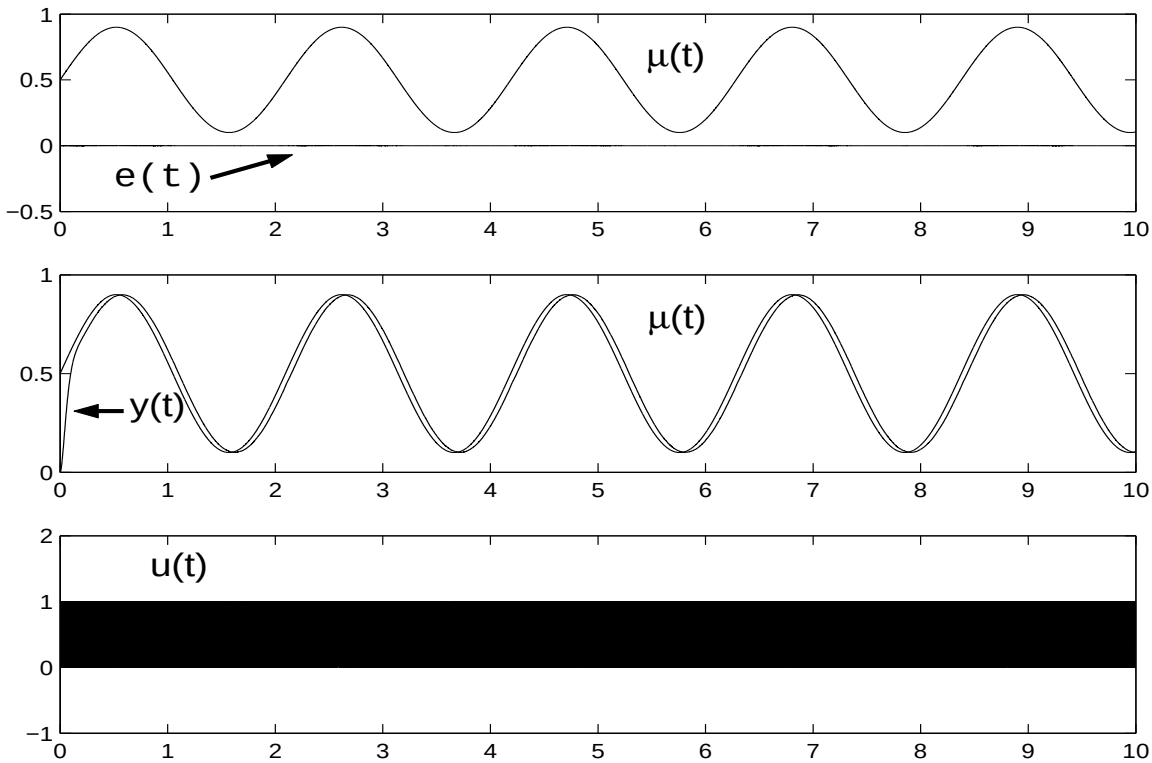

Performance of $\Sigma - \Delta$ modulator and tracking properties of the low pass filtered switched output.

Boost Unit Power Factor Rectifier

Boost

Consider the *boost type unit power factor rectifier*, or mono-phasic rectifier, shown in the figure.

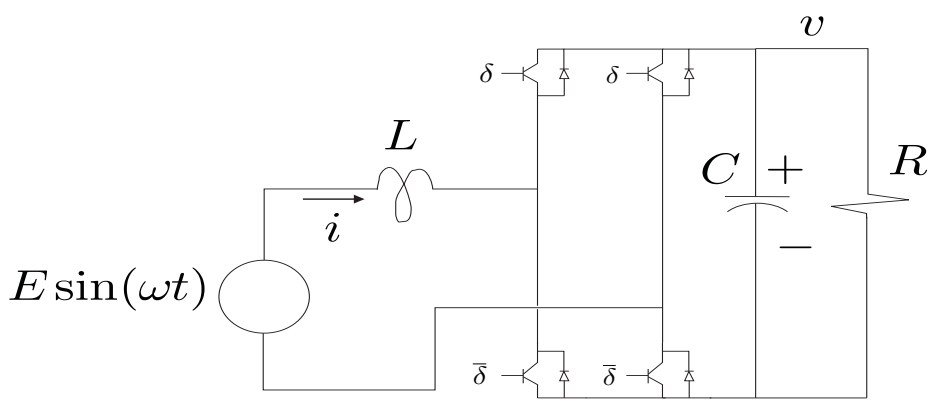

The system is described by the following set of differential equations:

$$
\begin{aligned}
L\frac{di}{dt} &= -\mu v + E\sin(\omega t) \\
C\frac{dv}{dt} &= \mu i - \frac{1}{R_L}v
\end{aligned}
$$

where i is the inductor current, v is the output capacitor voltage and μ is the switch position function taking values in the discrete set $\{-1, 1\}$. The line resistance was assumed to be negligible.

We consider the *state average* system equations by simply replacing the actual states of the system description by average states, while letting the control input continuously take values in the closed interval $[-1, 1]$ of the real line. In other words, we consider

$$
\begin{aligned}
L\frac{dI}{dt} &= -u_{av}V + E\sin(\omega t) \\
C\frac{dV}{dt} &= u_{av}I - \frac{1}{R_L}V
\end{aligned}
$$

to be the *average model* of the original system, with u_{av} being now a continuous scalar signal taking values in the set $[-1, 1]$.

The *normalization* of the average system equations is carried out according to the following state and time coordinates transformation:

$$x_1 = \frac{I}{E}\sqrt{\frac{L}{C}}, \quad x_2 = \frac{V}{E}, \quad \tau = \frac{t}{\sqrt{LC}}$$

The normalized average system equations are then obtained in the following form

$$\begin{aligned} \dot{x}_1 &= -u_{av}x_2 + \sin(\omega_n \tau) \\ \dot{x}_2 &= u_{av}x_1 - \frac{x_2}{Q} \end{aligned}$$

where

$$Q = R_L\sqrt{\frac{C}{L}} \qquad \omega_n = \omega\sqrt{LC}$$

Note that we have abusively used the "dot" notation to actually mean derivation with respect to the *normalized* time coordinate τ.

The control objectives for the average system are twofold:

• It is desired to have the average normalized inductor current track a sinusoidal signal of constant amplitude A, yet to be determined, and of the same angular frequency ω_n as the input source. This objective guarantees a unit power factor

• It is desired that the dc component of the average normalized voltage x_2 stabilizes to a constant desired value denoted by V_d.

The total stored average normalized energy of the system is given by

$$H = \frac{1}{2}\left[x_1^2 + x_2^2\right]$$

The total power is given by the time derivative of H,

$$\frac{dH}{dt} = x_1 \sin(\omega_n \tau) - \frac{x_2^2}{Q}$$

where the first summand corresponds with the input power and the second term corresponds to the delivered power at the load. The steady state value of the dc component of the total power should balance to zero, since the system is lossless. We have then the following steady state power balance condition:

$$\langle \overline{x_1} \sin(\omega_n \tau) \rangle_{dc} = \left\langle \frac{\overline{x_2}^2}{Q} \right\rangle_{dc}$$

where the "overline" stands for steady state value of the involved variable.

Using the desired values as the steady state value we obtain the following relationship

$$\left\langle A \sin^2(\omega_n \tau) \right\rangle_{dc} = \frac{V_d^2}{Q}$$

From where it is immediate to obtain:

$$A = \frac{2V_d^2}{Q}$$

This relation will be quite useful in the sequel.

The fact that the inductor current amplitude A and the desired dc component of the output voltage satisfy the above relation is sometimes addressed as the *solvability condition*. When inductor resistances are considered, the obtained condition further reveals a natural limitation of the reachable output voltages.

The average normalized boost based unity power rectifier is a system of the form

$$\dot{x} = \mathcal{J}(u)x - \mathcal{R}x + \mathcal{E}(\tau)$$

with $\mathcal{J} = \mathcal{J}_0 + u\mathcal{J}_1$, with $\mathcal{J}_0$ and $\mathcal{J}_1$ being constant skew-symmetric matrices. $\mathcal{R}$ is a positive semi-definite matrix while $\mathcal{E}(\tau)$ is a vector of smooth bounded components

This class of systems enjoys the following property: Let the tracking error be defined by $e = x - x^*(\tau)$, where $x^*(\tau)$ is a desired smooth state trajectory. Let $e_u = u - u^*(\tau)$ where $u^*(\tau)$ is the nominal control input corresponding to the reference state trajectory $x^*(\tau)$.

The exact dynamic model of the evolution of the trajectory tracking error of the system is given by

$$\dot{e} = \mathcal{J}(u)e - \mathcal{R}e + \mathcal{J}_1 x^*(\tau)e_u$$

In the particular case of the boost based unity power factor rectifier, we have that the tracking error dynamic system is given by:

$$\begin{aligned}\dot{e}_1 &= -ue_2 - x_2^*(\tau)e_u \\ \dot{e}_2 &= ue_1 - \frac{e_2}{Q} + x_1^*(\tau)e_u \\ e_y &= e_2\end{aligned}$$

The proposed linear time varying feedback control law reads

$$e_u = -\gamma\left[-x_2^* e_1 + x_1^*(\tau)e_2\right]$$

and the *matching condition* takes the form:

$$\begin{bmatrix} \gamma[x_2^*]^2 & -\gamma x_2^* x_1^* \\ -\gamma x_2^* x_1^* & \frac{1}{Q} + \gamma[x_1^*]^2 \end{bmatrix} > 0$$

which is certainly valid for any non-zero state trajectory.

The average linear time varying controller

$$\begin{aligned}u &= u^*(\tau) + \gamma\left[x_2^*(x_1 - x_1^*) - x_1^*(x_2 - x_2^*)\right] \\ &= u^*(\tau) + \gamma\left[x_2^* x_1 - x_1^* x_2\right]\end{aligned}$$

is the required feedback control law.

The main problem now becomes one of specifying the nominal state and input trajectories, $(x^*(\tau), u^*(\tau))$, in accordance with the control objectives. The problem is by no means a trivial one unless one resorts to flatness of the original system. We have the following property of the boost based unity power factor precompensator system.

The average normalized system description

$$\begin{aligned} \dot{x}_1 &= -ux_2 + sin(\omega_n \tau) \\ \dot{x}_2 &= ux_1 - \frac{x_2}{Q} \\ y &= x_2 \end{aligned}$$

is *flat*, with flat output given by the average normalized total stored energy:

$$F = \frac{1}{2}\left[x_1^2 + x_2^2\right]$$

The time derivative of F, which is the total average normalized power, is given by:

$$\dot{F} = x_1 \sin(\omega_n \tau) - \frac{x_2^2}{Q}$$

Eliminating x_2 from the last two relations we obtain a quadratic equation for x_1 in terms of F and $\dot{F}$.

$$x_1^2 + [Q\sin(\omega_n\tau)]\,x_1 - (Q\dot{F} + 2F) = 0$$

The positive solution for the differential parametrization of the average normalized current is readily obtained as:

$$x_1 = -\frac{Q}{2}\sin(\omega_n\tau) + \sqrt{\frac{Q^2}{4}\sin^2(\omega_n\tau) + (Q\dot{F} + 2F)}$$

Using the obtained parametrization for x_1 one obtains, from the system equations, the corresponding differential parametrization for x_2

$$x_2 = \sqrt{Q\left[-\frac{Q}{2}\sin^2(\omega_n\tau) + \sin(\omega_n\tau)\sqrt{\frac{Q^2}{4}\sin^2(\omega_n\tau) + (Q\dot{F} + 2F)} - \dot{F}\right]}$$

The average control input signal u is also differentially parameterized in terms of F, $\dot{F}$ and $\ddot{F}$ using, for instance, the relation obtained from the average normalized inductor current equation:

$$u = \frac{\sin(\omega_n \tau) - \dot{x}_1}{x_2}$$

The previous differential parameterizations allow us to compute the nominal state trajectories and the nominal control input associated with a nominal trajectory of the flat output which is compatible with the control objectives.

Let the unit power factor desired nominal value of $x_1(\tau)$ be given by the signal $x_1^*(\tau) = A \sin(\omega_n \tau)$ then the differential parametrization of x_1 leads to the following (stable) differential equation for F^*:

$$\dot{F}^* = -\frac{2}{Q} F^* + \left[\frac{A(A+Q)}{Q}\right] \sin^2(\omega_n \tau)$$

In terms of the desired steady state constant average output voltage $< \overline{x}_2 >_{dc} = V_d$ the differential equation satisfied by the flat output (average total stored energy) is obtained by using the relation $A = 2V_d^2/Q$. We get:

$$\dot{F}^* = -\frac{2}{Q}F^* + \frac{2V_d^2}{Q}\left(1 + \frac{2V_d^2}{Q^2}\right)\sin^2(\omega_n\tau)$$

The dc component of the steady state solution of the above differential equation is computed to be

$$\left\langle \overline{F} \right\rangle_{dc} = \frac{V_d^2}{2}\left(1 + \frac{2V_d^2}{Q^2}\right)$$

which precisely coincides with the value obtained from the flat output definition

$$\begin{aligned}
\left\langle \overline{F} \right\rangle_{dc} &= \frac{1}{2}\left[\left\langle \overline{x}_1^2 \right\rangle_{dc} + \left\langle \overline{x}_2^2 \right\rangle_{dc}\right] \\
&= \frac{1}{2}\left[\left\langle A^2 \sin^2(\omega_n\tau) \right\rangle_{dc} + \left\langle V_d^2 \right\rangle_{dc}\right] \\
&= \frac{1}{2}\left[\frac{A^2}{2} + V_d^2\right] = \frac{V_d^2}{2}\left[1 + \frac{2V_d^2}{Q^2}\right]
\end{aligned}$$

The trajectory planning aspects of the problem, aimed at producing the required nominal state and control input trajectories, is carried out as follows:

We specify a desired steady state average normalized output voltage $V_d > 1$. This quantity allows us to obtain, thanks to the expression $A = 2V_d^2/Q$, the nominal average normalized line current $x_1^* = A\sin(\omega_n\tau)$. The value of A and V_d allow us to compute the average value of the nominal steady state flat output F as

$$\overline{F} = \frac{V_d^2}{2}\left(1 + \frac{2V_d^2}{Q^2}\right)$$

We solve, off line, the flat output differential equation

$$\dot{F}^* = -\frac{2}{Q}F^* + \frac{2V_d^2}{Q}\left(1 + \frac{2V_d^2}{Q^2}\right)\sin^2(\omega_n\tau)$$

and obtain the nominal flat output trajectory. A natural initial condition for such a differential equation is given by the computed value $\overline{F}$.

Knowledge of F^* and x_1^* allows for the computation of the nominal output voltage trajectory x_2^* from the normalized, nominal, flat output definition $F^* = \frac{1}{2}(x_1^* + x_2^*)$.

Finally, using any of the system equations we proceed to compute the nominal average control input u^*, for example, from the line current equation

$$u^* = \frac{\sin(\omega_n \tau) - \dot{x}_1^*}{x_2^*}$$

The above procedure for computing nominal state and input trajectories is specially suitable for achieving a steady state to steady state maneuver for the rectifier variables.

Simulations

We considered a boost unit power factor rectifier with the following data taken from Escobar *et al.* IEEE TCST Vol. 9, No. 4, pp. 637-644.

$$L = 0.006\ [H], \quad C = 0.0022\ [F],$$

$$\omega_n = 2\pi 50\ [rad/s], \quad R = 80\ [\Omega]$$

Simulations

Suppose it is desired to achieve a steady state characterized by the normalized voltage value of $< z_2 >_{dc}$= 1.3 and $z_1 = 0.08 \sin(\omega_n \tau)$. Right after stabilizing the rectifier to this initial steady state, it is also desired to smoothly transfer this steady state to a new one, characterized by $< z_2 >_{dc}$= 2.6 and $z_1 = 0.3 \sin(\omega_n \tau)$. The transfer is to take place in an interval of approximately 0.3 units of normalized time.

The simulations show the performance of the system variables under the above described control task.

Simulations

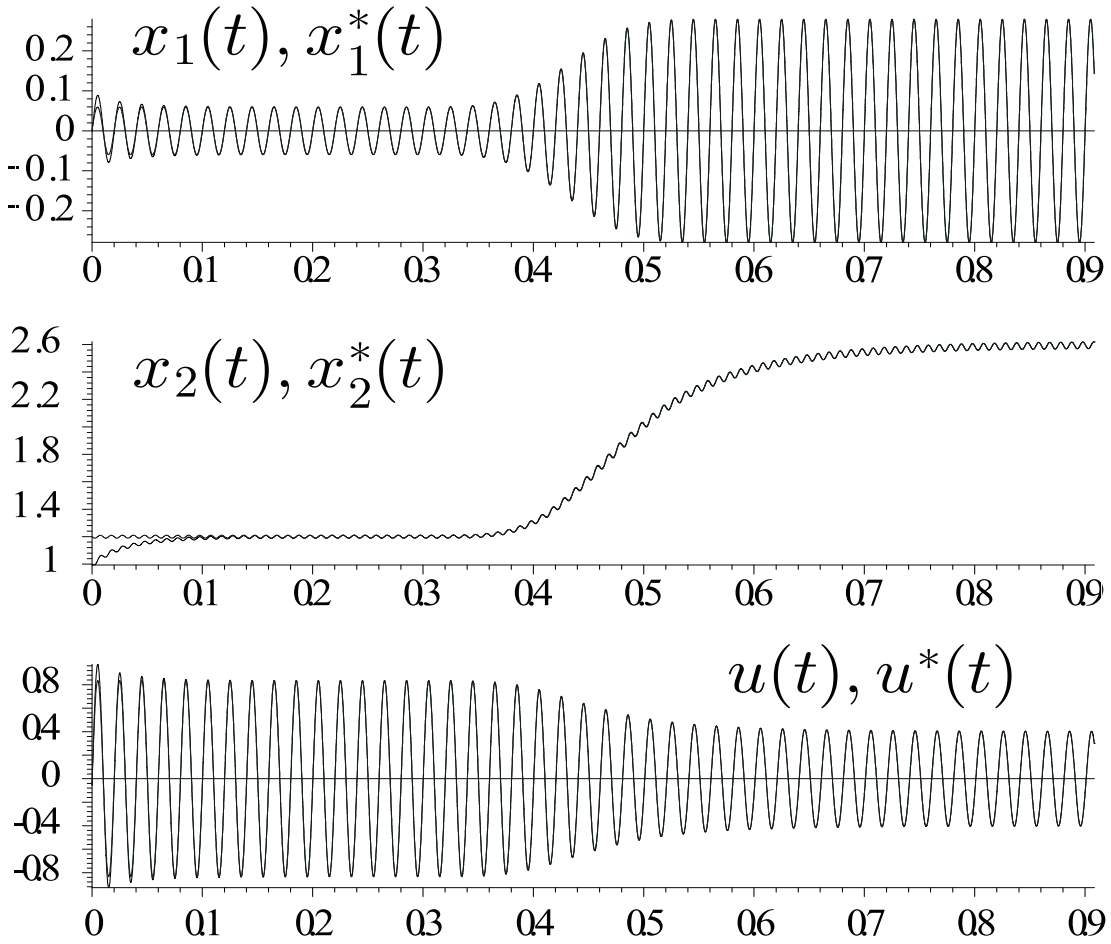

Influence of the line resistance

Consider the same mono-phasic boost type of converter including now a significant line resistance of value R, the normalized system equations are written as

$$\begin{aligned} \dot{z}_1 &= -uz_2 - qz_1 + \sin(\omega_n \tau) \\ \dot{z}_2 &= uz_1 - \frac{z_2}{Q} \end{aligned}$$

where $q = R\sqrt{\frac{L}{C}}$ and $Q = R_L\sqrt{\frac{L}{C}}$.

Given a nominal state and input trajectory z_1^*, z_2^*, u^* the exact tracking error system, describing the evolution of $e = z - z^*$,is readily obtained to be

$$\begin{bmatrix} \dot{e}_1 \\ \dot{e}_2 \end{bmatrix} = \begin{bmatrix} 0 & -u \\ u & 0 \end{bmatrix} \begin{bmatrix} e_1 \\ e_2 \end{bmatrix} - \begin{bmatrix} q & 0 \\ 0 & \frac{1}{Q} \end{bmatrix} \begin{bmatrix} e_1 \\ e_2 \end{bmatrix} + \begin{bmatrix} -z_2^* \\ z_1^* \end{bmatrix} e_u$$

where $e_u = u - u^*$. Clearly the tracking error system is of the form: $\dot{e} = \mathcal{J}(u)e - \mathcal{R}e + b^*(t)e_u$

The dissipativity matching condition is clearly satisfied, in a stronger fashion than before, since:

$$\mathcal{R} + \gamma b^*(t)[b^*(t)]^T = \begin{bmatrix} q + \gamma[z_2^*(t)]^2 & -\gamma z_1^*(t) z_2^*(t) \\ -\gamma z_1^*(t) z_2^*(t) & \frac{1}{Q} + \gamma[z_1^*(t)]^2 \end{bmatrix} > 0$$

Note that this is proved by:

$$\begin{aligned} q + \gamma[z_2^*(t)]^2 &> 0 \\ \det[\mathcal{R} + \gamma b^*(t)[b^*(t)]^T] &= \frac{Q}{q} + \gamma q[z_1^*]^2 + \frac{\gamma}{Q}[z_2^*]^2 > 0 \end{aligned}$$

A linear time-varying feedback controller which drives the tracking error to zero is given by

$$\begin{aligned} u &= u^* - \gamma\left[-z_2^* e_1 - e_2 z_1^*\right] \\ &= u^* - \gamma\left[z_1^* z_2 - z_1 z_2^*\right] \end{aligned}$$

We must now concentrate in finding a set of desired nominal average normalized state and control input trajectories.

Flatness and trajectory tracking

The normalized average rectifier system is flat, with flat output given by the total normalized average stored energy

$$F = \frac{1}{2}\left[z_1^2 + z_2^2\right]$$

In this case, the total normalized average power balance is expressed as:

$$\dot{F} = -qz_1^2 + z_1 \sin(\omega_n \tau) - \frac{z_2^2}{Q}$$

From these two relations, we readily obtain the following differential parametrization of the state variables:

$$\begin{aligned} z_1 &= -\frac{Q}{2(1-qQ)}\sin(\omega_n\tau) + \sqrt{\frac{Q^2\sin^2(\omega_n\tau)}{4(1-qQ)^2} + \frac{2F+Q\dot{F}}{1-qQ}} \\ z_2 &= \sqrt{2F - \left[-\frac{Q}{2(1-qQ)}\sin(\omega_n\tau) + \sqrt{\frac{Q^2\sin^2(\omega_n\tau)}{4(1-qQ)^2} + \frac{2F+Q\dot{F}}{1-qQ}}\right]^2} \end{aligned}$$

We are interested in having $z_1^* = A\sin(\omega_n\tau)$ where A is a constant amplitude yet to be determined. In this manner, we obtain a power factor equals to 1 for the rectifier. Also, we would like the dc component of z_2 to be constant and of value, say, V_d. From the parametrization of z_1 we have that F^* should then satisfy the following linear differential equation with time-varying forcing term:

$$\dot{F}^* = -\frac{2}{Q}F^* + \frac{A}{Q}\left[A(1-qQ)+Q\right]\sin^2(\omega_n\tau)$$

The dc component of the nominal flat output F^*, denoted by $< F^* >_{dc}$, obtained when $z_1 = A\sin(\omega_n\tau)$, can be determined from the fact that the equality: $\frac{d<F^*>_{dc}}{d\tau} =< \frac{dF^*}{d\tau} >_{dc}= 0$ yields,

$$A = \frac{1}{2q} \pm \sqrt{\frac{1}{4q^2} - \frac{2V_d^2}{qQ}}$$

We take the "minus" sign in the previous expression in order to obtain a smaller value of the average normalized line current amplitude A. We set,

$$A = \frac{1}{2q} - \sqrt{\frac{1}{4q^2} - \frac{2V_d^2}{qQ}}$$

This relation, incidentally, demands that in order to have a real amplitude, the following restriction on the average desired dc output voltage component V_d should be satisfied

$$V_d^2 \; < \; \frac{1}{8}\left(\frac{Q}{q}\right)$$

Note that this limitation is not significant when the line resistance is ideally assumed to be zero ($q = 0$).

The dc component of the flat output is obtained as:

$$
\begin{aligned}
< F^* >_{dc} &= < \frac{1}{2}\left[A^2 \sin^2(\omega_n \tau) + V_d^2\right] >_{dc} \\
&= \frac{1}{4}A^2 + \frac{1}{2}V_d^2
\end{aligned}
$$

i.e.,

$$
< F^* >_{dc} = \frac{1}{4}\left[\frac{1}{2q} - \sqrt{\frac{1}{4q^2} - \frac{2V_d^2}{qQ}}\right]^2 + \frac{1}{2}V_d^2
$$

Summarizing: the convenient trajectory planning which achieves the desired control objectives thus demands the following formulae for the average normalized state variables

$$
\begin{aligned}
z_1^* &= A\sin(\omega_n\tau), \quad A = \frac{1}{2q} - \sqrt{\frac{1}{4q^2} - \frac{2V_d^2}{qQ}} \\
z_2^* &= \sqrt{2F^* - A^2\sin^2(\omega_n\tau)}
\end{aligned}
$$

where F^* is the solution of the following linear forced differential equation:

$$\dot{F}^* = -\frac{2}{Q}F^* + \frac{A}{Q}\left[A(1-qQ) + Q\right]\sin^2(\omega_n\tau)$$

with initial condition at time zero taken to be either zero (if the converter is being "started up") or compatible with an ongoing steady state behavior that will be changed to a new one after some time.

$$F^*(0) = 0, \quad \text{or} \quad F^*(0) = < F^*(0^-) >_{dc}$$

and V_d is chosen so that:

$$V_d < \sqrt{\frac{1}{8}\left(\frac{Q}{q}\right)}$$

We used again the three phase boost rectifier with the following data

$$L = 0.001\ [H], \quad C = 0.0022\ [F],\ R_L = 80\ \Omega,$$

$$r = 2.2\ \Omega$$

We first stabilized the system responses around the normalized average steady state characterized by the following normalized dc components and constant sinusoidal line current amplitude A

$$< z_2 >_{dc} = 1.091\ [V],\ < F^* >_{dc} = 0.596\ [V],$$

$$A = 0.0474\ [V]$$

The simulations depict a smooth controlled maneuver from the initial steady state towards a new one characterized by:

$$< z_2 >_{dc} = 2.0\ [V],\ < F^* >_{dc} = 2\ [V],$$

$$A = 0.22032\ [V]$$

Simulations

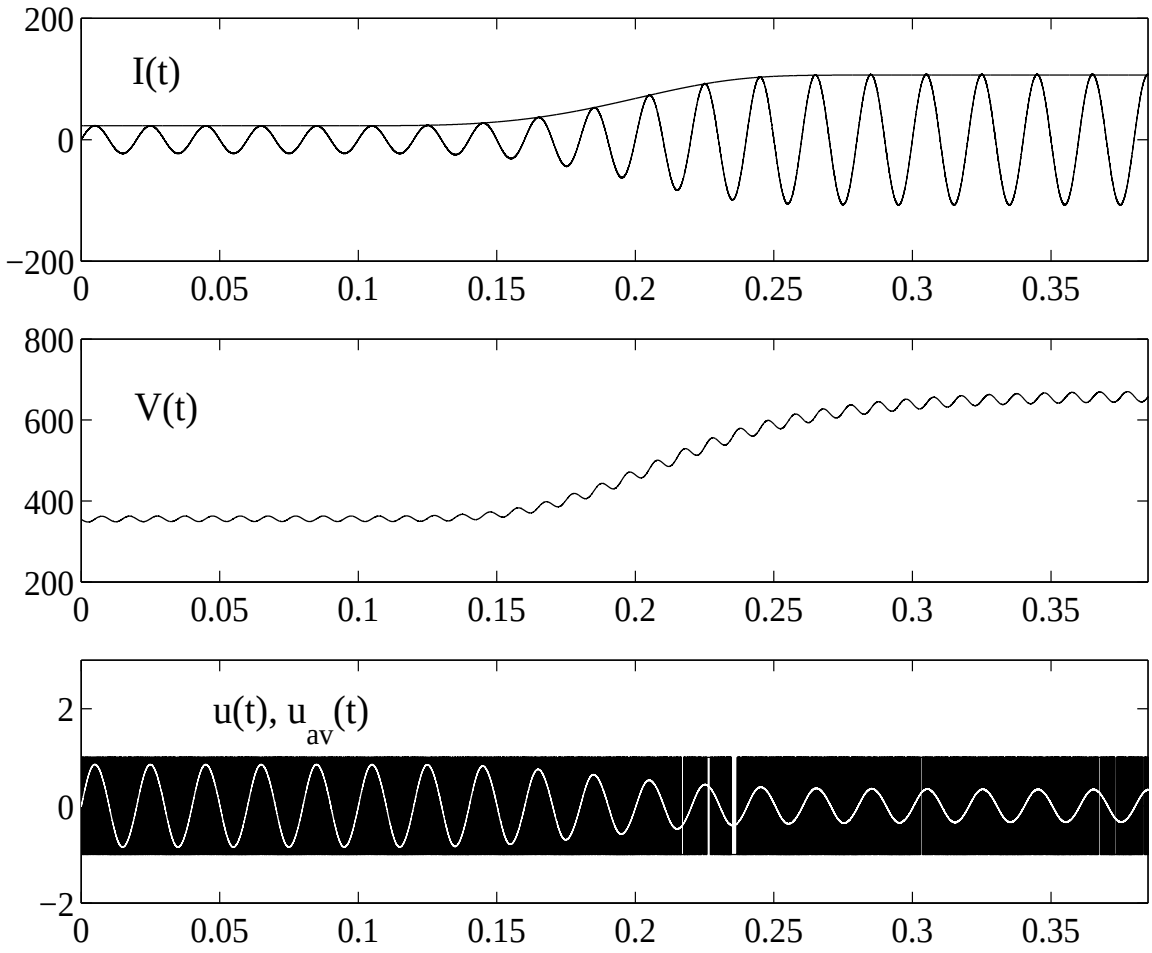

A three phase “boost” rectifier

Control of a Three Phase Rectifier

Consider the following average model of a balanced "boost" type three phase rectifier.

$$\begin{aligned} L\dot{i}_1 &= -u_{1,av}v_0 - Ri_1 + V_1 \\ L\dot{i}_2 &= -u_{2,av}v_0 - Ri_2 + V_2 \\ L\dot{i}_3 &= -u_{3,av}v_0 - Ri_3 + V_3 \\ C\dot{v}_0 &= u_{1,av}i_1 + u_{2,av}i_2 + u_{3,av}i_3 - \frac{v_0}{R_L} \end{aligned}$$

where $V_1 = V\cos(\omega t)$, $V_2 = V\cos(\omega t - \frac{2\pi}{3})$, $V_3 = V\cos(\omega t + \frac{2\pi}{3})$, represent the balanced external ac voltages. The average inputs, representing the switching actions, satisfy $u_{i,av} \in [-1, 1]\ \forall\, i$. R is the line resistance.

The state coordinate and time scale transformation

$$z_i = \left(\frac{1}{V}\sqrt{\frac{L}{C}}\right) i_j,\ j = 1, 2, 3. \quad z_4 = \frac{v_0}{V}, \quad \tau = \frac{1}{\sqrt{LC}}\, t$$

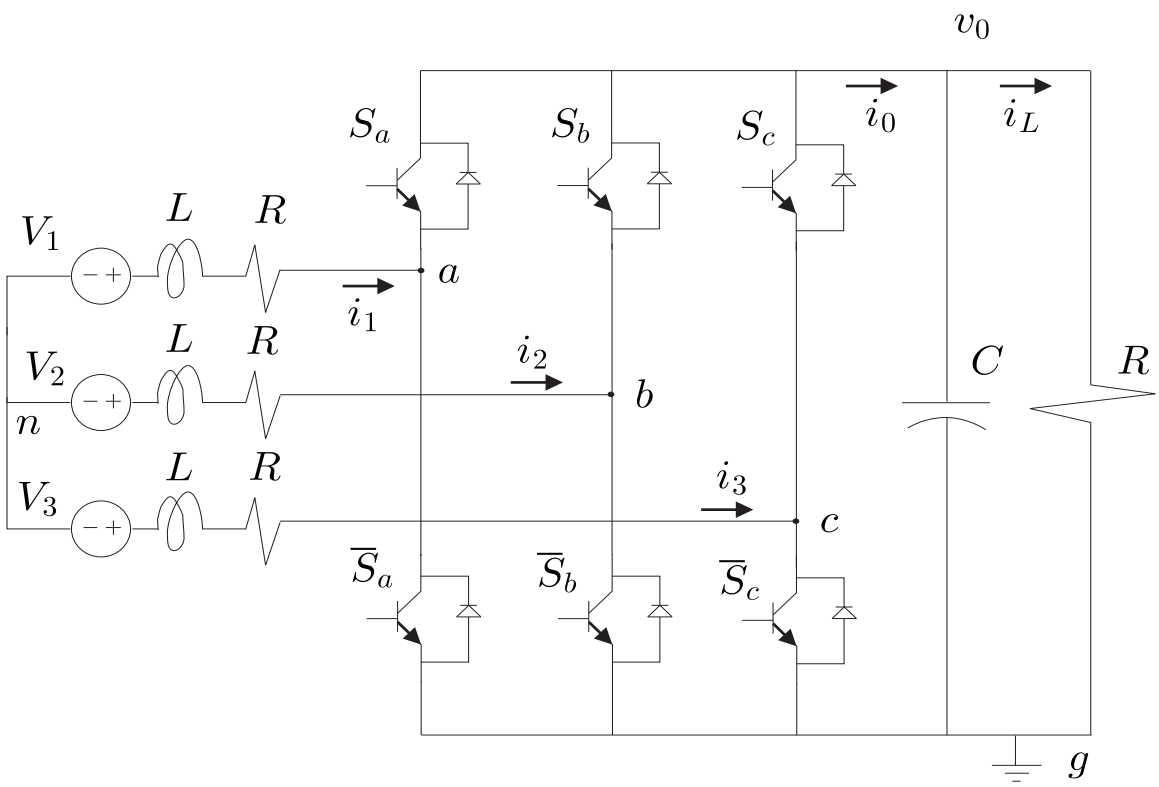

Three-phase Boost rectifier.

yields the following *normalized average model* of the system:

$$\begin{aligned}
\dot{z}_1 &= -u_{1,av}z_4 - Qz_1 + \cos(\omega_n\tau) \\
\dot{z}_2 &= -u_{2,av}z_4 - Qz_2 + \cos(\omega\tau - \frac{2\pi}{3}) \\
\dot{z}_3 &= -u_{3,av}z_4 - Qz_3 + \cos(\omega\tau + \frac{2\pi}{3}) \\
\dot{z}_4 &= u_{1,av}z_1 + u_{2,av}z_2 + u_{3,av}z_3 - \frac{z_4}{Q_L}
\end{aligned}$$

where

$$Q = \sqrt{\frac{C}{L}}R, \quad Q_L = \sqrt{\frac{C}{L}}R_L, \quad \omega_n = \omega\sqrt{LC}$$

We rewrite the normalized average system in the following "energy management" form: $\mathcal{A}\dot{z} = \mathcal{J}(u_{av})z - \mathcal{R}z + \mathcal{E}(t)$,

$$\frac{d}{d\tau}\begin{bmatrix} z_1 \\ z_2 \\ z_3 \\ z_4 \end{bmatrix} = \begin{bmatrix} 0 & 0 & 0 & -u_{1,av} \\ 0 & 0 & 0 & -u_{2,av} \\ 0 & 0 & 0 & -u_{3,av} \\ u_{1,av} & u_{2,av} & u_{3,av} & 0 \end{bmatrix}\begin{bmatrix} z_1 \\ z_2 \\ z_3 \\ z_4 \end{bmatrix}$$
$$- \begin{bmatrix} Q & 0 & 0 & 0 \\ 0 & Q & 0 & 0 \\ 0 & 0 & Q & 0 \\ 0 & 0 & 0 & \frac{1}{Q_L} \end{bmatrix}\begin{bmatrix} z_1 \\ z_2 \\ z_3 \\ z_4 \end{bmatrix} + \begin{bmatrix} \cos(\omega_n\tau) \\ \cos(\omega_n\tau - \frac{2\pi}{3}) \\ \cos(\omega_n\tau + \frac{2\pi}{3}) \\ 0 \end{bmatrix}$$

i.e. according to our previous notations; $\mathcal{A} = I$, $\mathcal{B} = 0$ and $\mathcal{E}(\tau)$ represents the vector of unit amplitude, normalized, line voltages with zero as the last component. (We have abusively used the "dot" notation " $\dot{z}$ " to mean $\frac{dz}{d\tau}$).

The matrix $\mathcal{B}^*(\tau)$ is, in this case, given by

$$\mathcal{B}^*(\tau) = \begin{bmatrix} -z_4^*(\tau) & 0 & 0 \\ 0 & -z_4^*(\tau) & 0 \\ 0 & 0 & -z_4^*(\tau) \\ z_1^*(\tau) & z_2^*(\tau) & z_3^*(\tau) \end{bmatrix}$$

We choose the matrix Γ to be diagonal of the form $\Gamma = \text{diag}[\gamma_1, \gamma_2, \gamma_3]$ with $\gamma_i > 0 \ \forall \ i$. It is easy to verify that the *dissipativity matching condition* is strongly uniformly satisfied in this case

$$\mathcal{R} + \mathcal{B}^*(\tau)\Gamma[\mathcal{B}^*(\tau)]^T = \begin{bmatrix} Q + \gamma_1[z_4^*(\tau)]^2 & 0 & 0 & \gamma_1 z_4^*(\tau) z_1^*(\tau) \\ 0 & Q + \gamma_2[z_4^*(\tau)]^2 & 0 & \gamma_3 z_4^*(\tau) z_2^*(\tau) \\ 0 & 0 & Q + \gamma_3[z_4^*(\tau)]^2 & \gamma_2 z_3^*(\tau) z_4^*(\tau) \\ \gamma_1 z_4^*(\tau) z_1^*(\tau) & \gamma_2 z_4^*(\tau) z_2^*(\tau) & \gamma_3 z_4^*(\tau) z_3^*(\tau) & \frac{1}{Q_L} + \sum_{i=1}^{3} \gamma_i [z_i^*(\tau)]^2 \end{bmatrix} > 0$$

The average linear tracking error feedback controller, based on static passive output feedback, is readily obtained as

$$\begin{aligned} u_{i\,av} &= u^*_{i\,av}(\tau) - \gamma_i\left[-z_4^*(\tau)(z_i - z_i^*) + z_i^*(z_4 - z_4^*)\right] \\ &= u^*_{i\,av}(\tau) - \gamma_i\left(-z_4^* z_i + z_i^* z_4\right), \quad i = 1,2,3 \end{aligned}$$

Contrary to what is customary in many publications in the control of these devices, we do not resort to $d-q$ transformations nor do we impose the *balancing conditions* on the original model. Rather, we have used the actual average normalized current and voltage model to obtain the linear controller. We will now resort to *flatness* in order to specify the required nominal state and input trajectories. In specifying such desired nominal trajectories, we shall use the perfect balance conditions. In other words, we shall force the closed loop system to track the response of an ideal balanced system obtained from the use of these conditions in the flatness based trajectory planning.

Clearly, the given system is flat with several possible choices for the flat outputs. We choose the three flat outputs as given by z_1, z_2 and z_4. Other possible choices are: $\{z_1, z_3, z_4\}$ and $\{z_2, z_3, z_4\}$. The flat outputs are obtained by jointly considering the system equations along with the current balance condition:

$$z_1 + z_2 + z_3 = 0$$

which may be considered as an additional *algebraic relation* to be satisfied by the system. From the validity of this last condition, we have the following *differential parametrization* of the (nominal) system variables:

$$\begin{aligned} u^*_{1,av} &= \frac{-\dot{z}^*_1 - Qz^*_1 + \cos(\omega_n \tau)}{z^*_4} \\ u^*_{2,av} &= \frac{-\dot{z}^*_2 - Qz^*_2 + \cos(\omega_n \tau - \frac{2\pi}{3})}{z^*_4} \\ z^*_3 &= -\left(z^*_1 + z^*_2\right) \end{aligned}$$

Note that by adding the three first differential equations in the model, and taking into account that: $z_1^* + z_2^* + z_3^* = 0$, the sum of the normalized line voltages is also zero and since z_4^* is not identically zero for all times, we conclude that the sum of the average nominal control inputs is necessarily constrained to satisfy the condition $u_1^* + u_2^* + u_3^* = 0$, for all times. Hence, we obtain the differential parametrization of the last nominal input u_3^* as:

$$\begin{aligned} u_{3,av}^* &= \left[\frac{\dot{z}_1^* + \dot{z}_2^* + Q(z_1^* + z_2^*) + \cos(\omega_n \tau + \frac{2\pi}{3})}{z_4^*}\right] \\ &= \left[\frac{-\dot{z}_3^* - Q(z_3^*) + \cos(\omega_n \tau + \frac{2\pi}{3})}{z_4^*}\right] \end{aligned}$$

Trajectory planning

The trajectory planning problem requires then the specification of the nominal flat output currents, z_1^* and z_2^*, as well as the desired output voltage trajectory z_4^*. To accomplish such planning we resort to ideal steady state conditions.

We let $z_1^*(\tau) = a\cos(\omega_n\tau)$ and $z_2^*(\tau) = a\cos(\omega_n\tau - \frac{2\pi}{3})$ i.e., we impose on the ideal current trajectories a constant amplitude of value a and a unity power factor. As a consequence of the balanced condition, we will have: $z_3^* = a\cos(\omega_n\tau + \frac{2\pi}{3})$.

Using the expressions for $u^*_{1,av}$, $u^*_{2,av}$ and $u^*_{3,av}$ in terms of the flat outputs, given above, we obtain the following expression for the differential equation defining the average normalized output voltage z^*_4:

$$\frac{dz^*_4}{d\tau} = \frac{3a}{2z^*_4}(1 - aQ) - \frac{z^*_4}{Q_L}$$

The (positive) steady state average value of z^*_4 is then just given by:

$$\overline{z_4}^* = \sqrt{\frac{3}{2}a(1 - aQ)Q_L}$$

The steady state line current constant amplitude a can then be expressed in terms of the desired equilibrium value for the average output voltage $\overline{z_4}^*$ as:

$$a = \frac{1}{2Q} \pm \sqrt{\frac{1}{4Q^2} - \frac{2}{3}\frac{[\overline{z_4}^*]^2}{QQ_L}}$$

We may choose the negative sign in the square root in order to have smaller values of the line currents.

A natural limitation of the average normalized equilibrium value of the output voltage, $\overline{z_4}^*$, is given by the condition:

$$[\overline{z}_4^*]^2 \; < \; \frac{3}{8}(\frac{Q_L}{Q})$$

The previous steady state formulae also allow us to carry out an efficient trajectory planning for, say, smoothly rising the output average normalized load voltage z_4 of the three phase rectifier from an initial equilibrium value, say $z_4^*(\tau_1)$, towards a final equilibrium value $z_4^*(\tau_2)$, within a finite interval of normalized time $[\tau_1, \tau_2]$. Once the initial and final equilibrium points of $z_4^*(\tau)$ are decided upon, we may determine the nominal corresponding constant values of the normalized amplitude parameter a, valid before τ_1 and after τ_2. We may then use a Bézier polynomial function for smoothly interpolating between the initial and the final value of a, thus obtaining a time-varying amplitude $a(\tau)$. This, in turn, determines the corresponding smooth trajectory for smoothly increasing the amplitude of the reference average normalized line currents.

Since, in such a case, a becomes a time-varying function, then the nominal currents for the transition maneuver are given by:

$$z_1^*(\tau) = a(t)\cos(\omega_n \tau),$$

$$z_2^*(\tau) = a(t)\cos(\omega_n \tau - \frac{2\pi}{3}), \text{ etc.}$$

These expressions must be taken into account for computing the nominal average control input signals: $u_{1,av}^*(\tau)$, $u_{2,av}^*(\tau)$ and $u_{3,av}^*(\tau)$. Computation of the required time derivative $\dot{a}(\tau)$ is clearly trivial.

Switched implementation of the average design

The implementation of the average feedback control laws, as switched control actions, is easily accomplished by resorting to $\Sigma-\Delta$ modulation. The $\Sigma-\Delta$ devices accurately translating the average bounded control signals $u_{i\ av} \in [-1, 1]$ into switched signals $u_i \in \{1, -1\}$ are described by,

$$u_i = \text{sign}\ (e_i), \quad \frac{de_i}{d\tau} = u_{i\ av} - u_i, \quad i = 1, 2, 3$$

Simulations

Simulations were performed on the given system with the following data, where, for simplicity, we have taken the line resistances to be ideally zero.

$$L = 0.002 \text{ H}, \quad C = 0.002\ F, \quad R_L = 5.9 \text{ Ohm}$$

$$V = 230\sqrt{2} \text{ Volts}, \quad R = 0$$

It was desired to rise the rectified output voltage from an initial steady state value of 500 Volts to a new voltage of 1106 Volts in approximately 0.04 seconds. This corresponds to planning a smooth transition for a from the initial value of 0.25 to the final value of 1.2. Since $Q = 0$ we have no limitations in the achievable values of the output voltage.

Simulations

Next figure shows the response of the system quickly achieving balanced line currents and their smooth amplitude increase to the new steady state value, the figure also shows the switching actions along with the average control input for one of the controls u_1 (the rest are rather similar). The average control signal is obtained from the evolution of the proposed linear feedback controller and, finally, the figure also shows the load voltage increasing as desired in the specified amount of time.

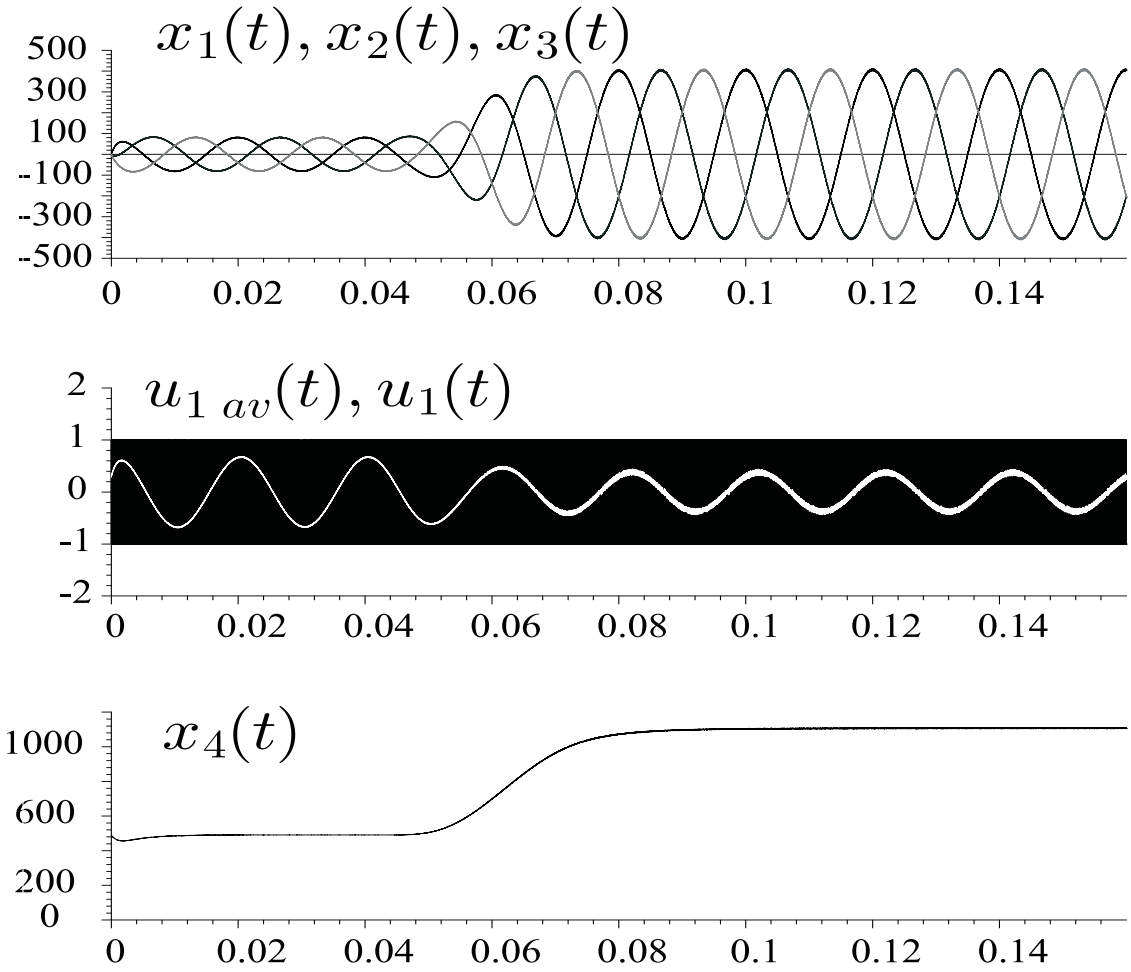

Switched controlled responses of three-phase Boost rectifier.

A three phase rectifier-dc motor system

A three phase rectifier dc motor system

Consider the following model of a boost type rectifier feeding a DC motor:

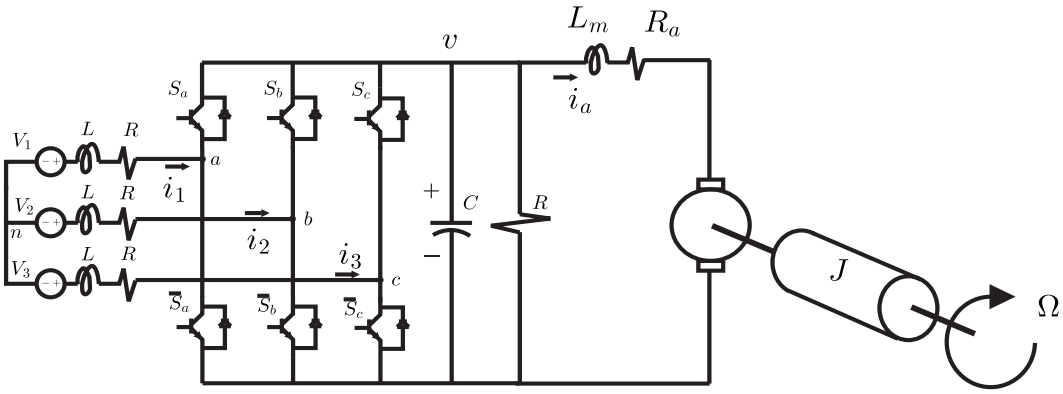

A three phase rectifier-dc motor system

The dynamic model of the composite system is obtained as:

$$
\begin{aligned}
L\frac{d}{dt}i_1 &= -u_1 v - Ri_1 + V_m \cos(\omega t) \\
L\frac{d}{dt}i_2 &= -u_2 v - Ri_2 + V_m \cos(\omega t - 2\pi/2) \\
L\frac{d}{dt}i_3 &= -u_3 v - Ri_3 + V_m \cos(\omega t + 2\pi/3) \\
C\frac{d}{dt}v &= u_1 i_1 + u_2 i_2 + u_3 i_3 - \frac{v}{R_L} - i_a \\
L_m\frac{d}{dt}i_a &= -R_a i_a - K\Omega + v \\
J\frac{d}{dt}\Omega &= K i_a - B\Omega
\end{aligned}
$$

Definition of the problem It is desired to rise the motor angular velocity from an initial equilibrium value towards a final equilibrium value within a feasible finite time interval.

A three phase rectifier dc motor system

We solve the problem by resorting to an average normalized model of the switched system.

$$z_j = \left(\frac{1}{V_m}\sqrt{\frac{L}{C}}\right) i_j, \;\; j = 1, 2, 3 \quad z_4 = \frac{v}{V_m},$$

$$z_5 = \left(\frac{1}{V_m}\sqrt{\frac{L}{C}}\right) i_a, \quad z_6 = \Omega\sqrt{LC}, \quad \omega_n = \omega\sqrt{LC}$$

$$\tau = \frac{t}{\sqrt{LC}}$$

We define

$$\alpha = \frac{L_m}{L}, \;\; \beta = \frac{J}{V_m^2 C^2 L}, \;\; Q = R\sqrt{\frac{C}{L}}, \;\; Q_L = R_L\sqrt{\frac{C}{L}},$$

$$Q_B = \frac{B}{V_m^2\sqrt{LC}}, \quad \gamma = \frac{K}{V_m\sqrt{LC}}$$

A three phase rectifier dc motor system

We obtain the following average normalized system

$$
\begin{aligned}
\frac{d}{d\tau}z_1 &= -u_{1\ av}z_4 - Qz_1 + \cos(\omega_n\tau) \\
\frac{d}{d\tau}z_2 &= -u_{2\ av}z_4 - Qz_2 + \cos(\omega_n\tau - 2\pi/2) \\
\frac{d}{d\tau}z_3 &= -u_{3\ av}z_4 - Qz_3 + \cos(\omega_n\tau + 2\pi/3) \\
\frac{d}{d\tau}z_4 &= u_{1\ av}z_1 + u_{2\ av}z_2 + u_{3\ av}z_3 - \frac{z_4}{Q_L} - z_5 \\
\alpha\frac{d}{d\tau}z_5 &= -Q_a z_5 - \gamma z_6 + z_4 \\
\beta\frac{d}{d\tau}z_6 &= \gamma z_5 - Q_B z_6
\end{aligned}
$$

The average normalized system is of the form

$$\mathcal{A}\dot{z} = \mathcal{J}(u_{av})z - \mathcal{R}z + \mathcal{E}(\tau)$$

A three phase rectifier dc motor system

$$\mathcal{A}\dot{z} = \mathcal{J}(u_{av})z - \mathcal{R}z + \mathcal{E}(\tau)$$

$$\begin{aligned}
\mathcal{A} &= \text{diag}[1,1,1,1,\alpha,\beta], \\
\mathcal{R} &= \text{diag}[Q,Q,Q,1/Q_L,Q_a,Q_B] \\
\mathcal{E}^T(\tau) &= [\cos(\omega_n\tau)\ \ \cos(\omega_n\tau - 2\pi/3)\ \ \cos(\omega_n\tau + 2\pi/3)\ \ 0\ \ 0\ \ 0]
\end{aligned}$$

$$\mathcal{J}(u_{av}) = \begin{bmatrix} 0 & 0 & 0 & -u_{1\,av} & 0 & 0 \\ 0 & 0 & 0 & -u_{2\,av} & 0 & 0 \\ 0 & 0 & 0 & -u_{3\,av} & 0 & 0 \\ u_{1\,av} & u_{2\,av} & u_{3\,av} & 0 & -1 & 0 \\ 0 & 0 & 0 & 1 & 0 & -\gamma \\ 0 & 0 & 0 & 0 & \gamma & 0 \end{bmatrix}$$

Let $z^*(\tau)$ and $u^*_{av}(\tau)$ be the nominal state and average control input trajectories. The tracking error system for $e = z - z^*(\tau)$ is given by

$$\mathcal{A}\dot{e} = \mathcal{J}(u_{av})e - \mathcal{R}e + B^*(\tau)e_u$$

where $e_u = u - u^*(\tau)$.

Let Γ be a diagonal matrix $\Gamma = \text{diag}[\gamma_1, \gamma_2, \gamma_3]$. The dissipativity matching condition is readily verified to be uniformly satisfied in accordance with:

$$\mathcal{R} + \mathcal{B}^*(t)\Gamma[\mathcal{B}^*]^T(t) =$$

$$\begin{bmatrix} Q+\gamma_1[x_4^*]^2 & 0 & 0 & -\gamma_1 x_1^* x_4^* & 0 & 0 \\ 0 & Q+\gamma_2[x_4^*]^2 & 0 & -\gamma_2 x_2^* x_4^* & 0 & 0 \\ 0 & 0 & Q+\gamma_3[x_3^*]^2 & \gamma_3 x_3^* x_4^* & 0 & 0 \\ -\gamma_1 x_1^* x_4^* & -\gamma_2 x_2^* x_4^* & -\gamma_3 x_3^* x_4^* & \frac{1}{Q_L}+\sum_{i=1}^{3}\gamma_i[x_i^*]^2 & 0 & 0 \\ 0 & 0 & 0 & 0 & Q_a & 0 \\ 0 & 0 & 0 & 0 & 0 & Q_b \end{bmatrix} > 0$$

A three phase rectifier dc motor system

$$\mathcal{A}\dot{e} = \mathcal{J}(u_{av})e - \mathcal{R}e + \mathcal{B}^*(\tau)e_u$$

with

$$\mathcal{B}^*(\tau) = \begin{bmatrix} -z_4^*(\tau) & 0 & 0 \\ 0 & -z_4^*(\tau) & 0 \\ 0 & 0 & -z_4^*(\tau) \\ z_1^*(\tau) & z_2^*(\tau) & z_3^*(\tau) \\ 0 & 0 & 0 \\ 0 & 0 & 0 \end{bmatrix}$$

Let $\Gamma = \text{diag}[\gamma_1, \gamma_2, \gamma_3]$ with $\gamma_i > 0$, $i = 1, 2, 3$. The average feedback control law, based on linear time-varying passive outputs feedback, is given by

$$u_{av} = u_{av}^*(\tau) - \Gamma[B^*(\tau)]^T(z - z^*(\tau))$$

i.e., for $j = 1, 2, 3$.

$$u_{j\ av}(\tau) = u_{j\ av}^*(\tau) - \gamma_j[-z_4^*(\tau)z_j + z_j^*(\tau)z_4]$$

Trajectory generation

The system is differentially flat, with the three flat outputs given by either one of the following sets of variables

$$\{z_1, z_2, z_6\}, \quad \{z_1, z_3, z_6\}, \quad \{z_2, z_3, z_6\}$$

We choose as nominal average trajectories the ones resulting from a *balanced* unit factor voltage and current trajectories based on a trajectory planning for the nominal motor angular velocity.

According to the control objectives, we specify, thanks to the flatness of the system, a rest to rest, or equilibrium to equilibrium nominal average trajectory for z_6 as $z_6^*(\tau)$, and a set of balanced, unit factor currents $z_1^*(\tau)$ and $z_2^*(\tau)$.

Trajectory generation

We set $z_6^*(\tau)$ as a Bézier polynomial smoothly interpolating between two normalized average velocity equilibria. We obtain

$$\begin{aligned} z_5^*(\tau) &= \frac{1}{\gamma}\left(\beta \dot{z}_6^*(\tau) + Q_b z_6^*(\tau)\right) \\ z_4^*(\tau) &= \frac{\alpha\beta}{\gamma}\ddot{z}_6^*(\tau) + \frac{1}{\gamma}(Q_a\beta + \alpha Q_b)\dot{z}_6^*(\tau) \\ &\quad + (\gamma + \frac{Q_a Q_b}{\gamma}) z_6^*(\tau) \end{aligned}$$

Choosing the average normalized flat outputs $z_1^*(\tau)$ and $z_2^*(\tau)$ as balanced unit factor currents with amplitudes $a(\tau)$, yet to be determined

$$\begin{aligned} z_1^*(\tau) &= a(\tau)\cos(\omega_n \tau) \\ z_2^*(\tau) &= a(\tau)\cos(\omega_n \tau - 2\pi/3) \\ z_3^*(\tau) &= -(z_1^*(\tau) + z_2^*(\tau)) = a(\tau)\cos(\omega_n \tau + 2\pi/3) \end{aligned}$$

Trajectory generation

The nominal control inputs are obtained from the current equations and the balanced condition as:

$$
\begin{aligned}
u_1^*(\tau) &= \frac{-\dot{z}_1^*(\tau) - Qz_1^*(\tau) + \cos(\omega_n\tau)}{z_4^*(\tau)}, \\
u_2^*(\tau) &= \frac{-\dot{z}_2^*(\tau) - Qz_2^*(\tau) + \cos(\omega_n\tau - 2\pi/3)}{z_4^*(\tau)}, \\
u_3^*(\tau) &= -(u_1^*(\tau) + u_2^*(\tau)) \\
&= \frac{-\dot{z}_3^*(\tau) - Qz_3^*(\tau) + \cos(\omega_n\tau + 2\pi/3)}{z_4^*(\tau)}
\end{aligned}
$$

In steady state equilibrium conditions we take the amplitude of the balanced currents $a(\tau)$ to be constant of value a. We get the following identity

$$
u_{1\,av}^*(\tau)z_1^*(\tau) + u_{2\,av}^*(\tau)z_2^*(\tau) + u_{3\,av}^*(\tau)z_3^*(\tau)
$$

$$
= \frac{3a}{2z_4^*(\tau)}(1 - aQ)
$$

Trajectory generation

The differential equation for the average normalized armature voltage $z_4^*(\tau)$ is given by

$$\frac{d}{d\tau}z_4^*(\tau) = \frac{3a}{2z_4^*(\tau)}(1 - aQ) - \frac{z_4^*(\tau)}{Q_L}$$

The equilibrium average normalized solution for the rectifier output voltage is given by

$$\overline{z_4}^* = \sqrt{\frac{3}{2}a(1 - aQ)Q_L}$$

The steady state line current constant voltage amplitude a may be expressed in terms of the equilibrium value for the average rectifier output voltage $\overline{z_4}^*$ by solving from the previous equation for a. We obtain:

$$a = \frac{1}{2Q} - \sqrt{\frac{1}{4Q^2} - \frac{2}{3}\frac{[\overline{z_4}^*]^2}{QQ_L}}$$

The minus sign chosen to get smaller currents.

Trajectory generation

A *solvability condition* which represents a natural limitation for the rectifier equilibrium output voltage is given by an imposed real nature on the voltage amplitude.

$$\overline{z_4}^* < \sqrt{\frac{3}{8}\left(\frac{Q_L}{Q}\right)}$$

Note that the relation

$$a = \frac{1}{2Q} - \sqrt{\frac{1}{4Q^2} - \frac{2}{3}\frac{[\overline{z_4}^*]^2}{QQ_L}}$$

allows us to carry out a trajectory planning for the balanced reference current common amplitude $a(\tau)$ for a rest to rest maneuver of the motor angular velocity. We specify

$$a(\tau) = \frac{1}{2Q} - \sqrt{\frac{1}{4Q^2} - \frac{2}{3}\frac{[z_4{}^*(\tau)]^2}{QQ_L}}$$

and plan the nominal normalized angular velocity reference trajectory $z_6^*(\tau)$ so that the *solvability condition* is uniformly satisfied.

Simulations

We performed simulations on a rectifier and a DC motor with the following parameter data "motor parameters

Motor parameters

$$J = 1.625 \times 10^{-4} \text{ [N.m.rad/s}^2\text{]}, \quad L_m = 25 \text{ [mH]},$$

$$Ra = 6 \text{ [Ohm]}, \quad K = 9 \text{ [V.s/rad]},$$

$$B = 1.2 \times 10^{-5} \text{ [N.m.s/rad]}$$

Rectifier parameters

$$L = 2 \text{ [mH]}, \; C = 2000 \text{ [}\mu\text{F]}, \; R_L = 5.9 \text{ [Ohm]},$$

$$V = 230\sqrt{2} \text{ [V]}, \; R = 0.037 \text{ [Ohm]}$$

Simulations

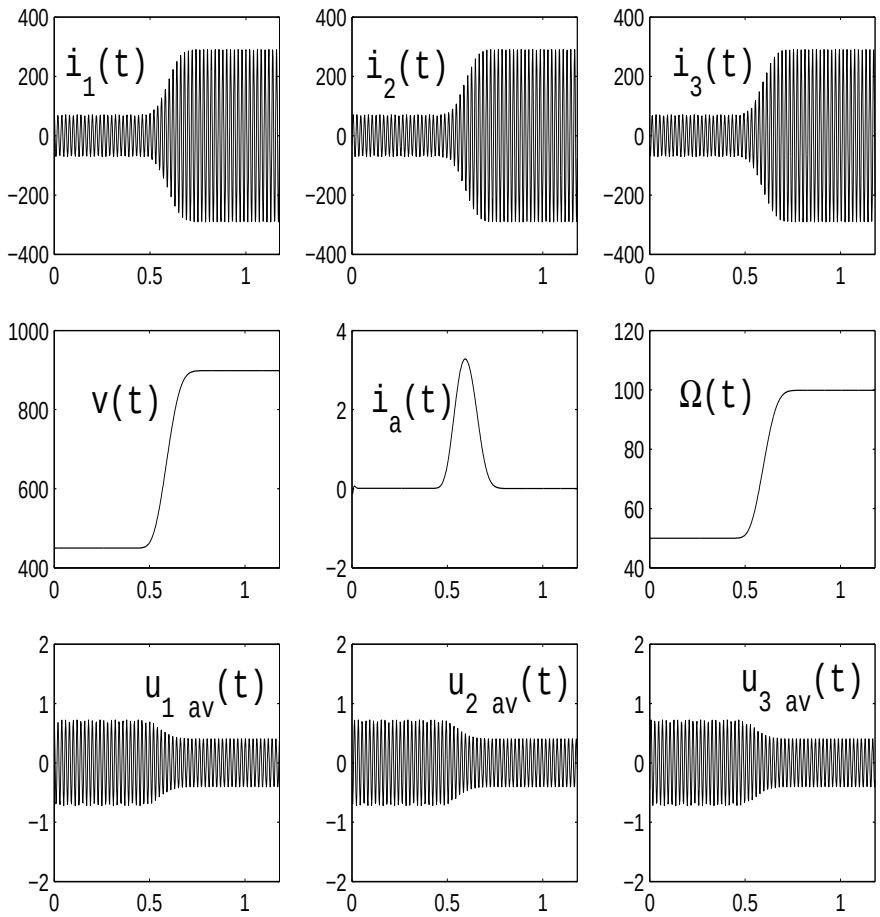

Conclusions

In this presentation we have proposed a linear feedback controller for the uniform semi-global stabilization of the output voltage in several switched power devices. The approach combines differential flatness, linear static passive output tracking error feedback and $\Sigma - \Delta$ modulation. The passive output considerations of the exact tracking error model allows for a simple linear state feedback which requires the nominal state and control inputs as data. The nominal state and inputs trajectories are based on the differential flatness of the average rectifier model. These nominal trajectories are planned on the basis of the flat outputs ideal desired behavior. We specify these flat output trajectories by imposing ideal behaviors which conveniently imply unit power factor for each line, as well as perfect balancing conditions on the rectifier.

The average control inputs are fed into independent $\Sigma - \Delta$ modulators for a sliding mode type of controller signal implementation. The outputs of the $\Sigma - \Delta$ modulators are, in fact, switched output signals acting as the actual control inputs. These switched inputs cause average responses which represent the *ideal sliding* features of the underlying sliding regime taking place on the error space of the $\Sigma - \Delta$ modulators. The designed ideal closed loop average features are thus efficiently recovered in the switched implementation.